Viewer License Agreement

You Must Read This License Agreement Before Proceeding.

This Scroll Wrap License is the Equivalent of a Shrink Wrap ⇒ Click License,
A Non-Disclosure Agreement that Creates a “Cone of Silence”.

By viewing this Document you **Permanently Release All Rights** that would allow you to restrict the **Royalty Free Use** by anyone implementing in Hardware, Software and/or other Methods in whole or in part what is Defined and Originates here in this Document. This Agreement particularly **Enjoins** the viewer from: Filing any **Patents** (À La Submarine?) on said **Technology & Claims** and/or the use of any **Restrictive Instrumen**t that prevents anyone from using said **Technology & Claims** Royalty Free and without any Restrictions. This also applies to registering any **Trademarks** including but not limited to those being marked with “™” that Originate within this Document. **Trademarks** and **Intellectual Property** that Originate here belong to the **Author** of this Document unless otherwise noted. Transferring said **Technology** and/or **Claims** defined here without this Agreement to another Entity for the purpose of but not limited to allowing that Entity to circumvent this Agreement is Forbidden and will NOT release the Entity or the Transfer-er from Liability. Failure to Comply with this Agreement is **NOT** an Option if access to this content is desired. This Document contains **Technology & Claims** that are a **Trade Secret: Proprietary & Confidential** and that cannot be transferred to another Entity without that Entity agreeing to this “Non-Disclosure Cone of Silence” **V.L.A.** Wrapper. Combining **Other Technology** with said **Technology** and/or **Claims** by Entity is an acknowledgment that the Entity is automatically placing **Other Technology** under the Licenses listed below making this License Self-Enforcing under an agreement of Confidentiality protected by this Wrapper.

The contents of/and this Document are released under the following licenses so long as this Agreement remains attached to any and all files, papers, etc... that contain any said **Technology** and/or **Claims**. Any Hardware manufactured with said **Technology** and/or **Claims** must contain a brief message, e.g. “**V.L.A.** This Hardware contains Technology and/or Claims that are Licensed for Unrestricted and Royalty Free Use. Any knowledge gained by viewing this hardware design may not be used to file any patents, employ any restrictions, or interfere with the manufacture, sale and use of this hardware”.

Software only: GNU General Public License 3.0 (GPL)
Hardware (w/ || w/o software): Tucson Arizona Packet Radio TAPR PDF ODT TXT

This Document is licensed under Creative Commons so long as this V.L.A. remains attached to the contents of this document in whole or in part. It may be re-distributed and hosted anywhere.
Open Source (CC BY 4.0), Proprietary (CC BY-ND 4.0)

Scrolling past this page is **The Point of No Return** and Acknowledges that You have Agreed to the Terms above. If you are Unable or Unwilling to Agree to these Terms then Close this Document.

Copyright ©2018 – J. S. Gilstrap – All Rights Reserved.

Summary of Claims

Trade Secret: Proprietary & Confidetial

TruColor™, Specification originally published in 2012 — A **Luma**/**Chroma** matrix with **RGB** weighting that produces an even stair step **Luma** signal when the 'WhYlCyGrMgRdBlBk' color bars are generated. When the **U** & **V** **Chroma** signal levels are adjusted and combined in quadrature they produce an equilateral hexagon on the Cartesian grid (vector scope), optimizing **Chroma** signal levels. The **I** & **Q** channels are positioned ±45° away from the **U** & **V** channels. The hue of TruColor's **I** channel is #**FB6E00** and is <2⅕° away from NTSC's **I** channel hue of #**FC6600** and TruColor's **Q** channel's hue of #**E700FB** is <4⅛° away from the **Green**-**Magenta** axis. This **YUV** (4:2:2) weighting and matrixing scheme could also be used for photographic still image files or digitized motion picture image files for which a file format could be optimized for the digital storage of these analog TV systems described here. This **RGB** weighting provides a better orthochromatic **B** & **W** visual representation to the eye than the panchromatic weighting used in most image file formats while also offering a symmetrical color wheel with the axes spaced 60° apart and of equal level, the same as the panchromatic weighted images. This lends its self to very similar **YUV** color processing used in the panchromatic image formats.

Chroma **Rotary Phase™** (**CRP™**) — Simulates PAL's on screen **Chroma** rotation (shift) while elegantly re-engineering it using a 3:1 interlace without the consequences of the objectionable on screen dot pattern. PAL broke NTSC's **2** frame repeat **Chroma** dot pattern by modifying its 180° ½ cycle/line **Chroma** phase offset to 270° ¾ cycle. PAL partially resolved this issue by adding **1** frame rate of cycles to the **Chroma** sub-carrier frequency creating a 180° phase inversion of the **Chroma** signal at the start of a new field to break up the dot pattern but still has a **4** frame repeat. With NTSC using an odd number of scan lines per frame and the 180° ½ cycle/line **Chroma** phase offset naturally produces this effect. When used with TruColor™ the rotating Chroma signal is spectrally balanced and the equilateral hexagon provides better color correction when **Chroma** phase variance occurs during marginal signal conditions. Vector [Phase] Rotation can be realized using two methods. **U** & **V** signals are both electrically rotated 90° per line in opposite directions or **U** & **V** are inverted 180° every two lines at the H/4 rate where **U** & **V** switching is offset by one line from each other. In the direct **U** & **V** 90° rotation scheme this indirectly causes **I** & **Q** to invert 180° every two lines at the H/4 rate and are offset by one line from each other. Likewise in the direct **U** & **V** 180° inversion this indirectly causes **I** & **Q** to rotate 90° per line in opposite directions. With an **I** & **Q** dual bandwidth setup where the two **I** & **Q** **Chroma** channels have different resolutions they too can be modulated using the same methods. In all schemes the on screen vector rotation (shift) is in the opposite direction of its electrical rotation as a result of the ½ cycle/line offset. With the ½ cycle/line offset and the H/4 modulation this places the sidebands at the ±¼ positions as it is in PAL in relation to the ½ position. In PAL the ¾ position for **U** is realized with the ¾ cycle/line offset of the **Chroma** sub-carrier period in relation to the horizontal period and **V**'s sub-modulated

sidebands at ¼ positioning is a result of the H/2 switching modulation. The ¾ cycle/line offset causes both **U** & **V** to rotate (shift) on screen in the same direction but the H/2 switching of **V** reverses its on screen rotation (shift).

3:1 Interlace, **72i/24PsF** – Using a 3:1 interlace with this faster field rate reduces flicker and with the frame rate set to conventional motion picture stock eliminates the need for Telecine or 3:2 pull down in NTSC or increasing the frame rate by 4⅙% to 25PsF for PAL. Using a 3:1 interlace with the 4 phase state **CRP™** (or PAL for that matter) realizes the simple diagonal chroma dot pattern very similar to NTSC. To achieve a natural 2 frame **Chroma** dot repeat rate the number of lines in 2 frames must be evenly divisible by 4 with an odd quotient but not by 8, which would result in a ½ line remainder. To achieve the 3:1 interlace a field must end with either ⅓ or ⅔ line when the number of lines per frame is divided by 3. It is also desirable to have the number of lines per frame of active picture area be a factor of 16. With these requirements lines per active picture frame increment by 48, e.g. 384, 432, 480, 528, 576... When using a ⅔ line offset the **Chroma** dot crawl moves up the screen as it does with NTSC. For a given color depending on the phase of the **Chroma** when the diagonal dot crawl pattern is symmetrical along a vertical line it closely resembles NTSC's dot pattern. When the **Chroma** phase is ±45° off from this the diagonal dot pattern angle could be shifted by up to ±15° from symmetrical. For CRTs if a 3:1 interlace motion pattern is visible greater phosphor persistence could minimize this without creating tracers during fast motion.

36PsF & 3:1 Interlace – If this faster motion picture rate of 36PsF is used for filming it is possible to easily convert this to a 72i/24PsF format by using 2 of the 3 scan lines to represent a frame for a quasi 2:1 interlace 72i/36PsF at ⅔ resolution. If the received signal is digitized and de-interlaced the missing line can be interpolated from the other 2 lines representing a full frame of lines for motion areas. Whether the signal is 24 or 36 FPS based the completed stored frames could be read from memory in a progressive or 2:1 interlace fashion.

4 Phase State Rotating Chroma combined with a **3:1 Interlace** – A 3:1 interlace produces harmonics that are spaced at the frame rate for both **Luma** & **Chroma**. When the **Chroma** is placed at the ½ cycle/line offset and not rotated Luma/Chroma adjacent cluster harmonics do not interfere with each other but **Chroma** interference does occur to **Luma** 1½ clusters away when the proper number of scan lines are used for a 3:1 interlace and 4 state **Chroma**. Rotating the **Chroma** phase at the H/4 rate shifts all **Chroma** harmonics ±½ frame rate and off of the **Luma** harmonics. The combined fine mesh spectrum is an alternate of **Luma** & **Chroma** harmonics evenly spaced at ½ the frame rate, just as it is with NTSC. It seems that a 4 phase state **Chroma** signal, be it **CRP™** or PAL is better suited using a 3:1 interlace although a PAL **Chroma** signal is less balanced so **CRP™** with TruColor™ should offer better phase variance cancellation during marginal signal conditions. Since the phase reversal of the **Chroma** signal happens on a per line basis within a whole frame for a 3:1 interlace Hanover lines are created instead of Hanover bars making any on screen

severe phase variance effects twice as fine as a PAL 2:1 interlace system when not using a delay line. A 3:1 interlace offers an alternating pattern for both field and frame lines. For 4 state **CRP™** that means phase rotation reversal and for 2 state NTSC it means phase inversion. There are no adjacent lines in a completed frame that are in the same state.

Vertical Sync Pulse Staggering – While it can be demonstrated that a 3:1 interlace when used with a 4 phase **Chroma** rotation system can produce a simple diagonal dot pattern the order in which the lines arrive for each sequential field does not provide optimal line alignment for a frame. By delaying or advancing a field by **1** field line (3 frame lines) in relation to the other two fields, depending on whether a ⅓ or ⅔ line offset is used, will align the **Chroma** dots in a uniform diagonal pattern. Also the diagonal shifting pattern of the **Chroma** dots for a field is in the opposite direction of a completed frame. While this solution may seem like a kluge, i.e. adding the frame rate to the **Chroma** frequency in PAL, it does not alter the precise structural relationship between the **Chroma** and horizontal frequencies thus maintaining the precise ½ cycle/line offset and simplicity in digital processing. Only the video signal information is slightly altered on a per line basis not the base format structure of the signal. For vertical lines on a screen it is of no consequence and the spectral content of the signal would look essentially the same as a non-staggered arrangement. However a diagonal line on screen using sync staggering would look like a saw tooth when displayed with an un-staggered sync pulse and may correlate with a slightly more complex spectral emission which should not produce any critical issues. Video signal content alone in a non-staggered system may produce a similar spectral effect if a diagonal line had a saw tooth characteristic to it. For 2:1 interlace PAL in lieu of adding the frame rate to the chroma frequency using staggered sync pulses would maintain a perfect ¾ cycle/ line offset providing digital processing simplicity and only a slight adjustment to the horizontal (15625.08811Hz) and vertical (50.00028194Hz) frequencies for which a conventional PAL receiver can handle. Using a 625 line analysis with a 2:1 interlace shows that a staggering of 2 field lines (4 frame lines) is needed to create the 180° chroma phase inversion at the start of a new field. Delaying either the even or odd field lines by 2 field lines will create the same pattern that adding the number of frame rate cycles to the **Chroma** frequency does. Staggering would create issues for PAL receivers using a TBC to generate an evenly spaced vertical sync pulse. 613, 621 or 629 scan lines will also work in lieu of vertical sync staggering.

Synergy – TruColor™ with its symmetrical and level balanced color wheel, **CRP™** with its electrically balanced rotation scheme, 3:1 interlace producing a 2 frame uniform dot pattern and repeat rate like NTSC, and 24FPS film speed, all work together to create a fully optimized analog Color TV signal that has the hue correction feature of PAL with optimized performance, a **Luma/Chroma** composite spectrum with NTSC's ½ frame rate spacing, a frame rate that allows a seamless conversion from film to video and a signal that is easily digitized. All of this is accomplished with normal and conventional analog TV signal formatting and possible more than 60 years ago. If only all of this was though of back then.

The ΣHSλ to λUV TruColor™ Matrix

(**Y**et **A**nother **C**hroma **M**atrix ;-). What **NTSC** should have been?

A method for converting **ΣHSλ** Color with a modified **Luma**(**λ**) to analog Color TV **λUV** to balance for better **Chroma** (**UV**) matrixing.

```
Where: Σ = Chroma level is a vector matrix sum/difference
           and not a saturation percentage factor.
       H = Hue of the Chroma signal in θ°
           derived from the quadrature matrix.
       S = Saturation level (R) of the Chroma signal as
           quadrature summation of the U & V vectors.
       λ = Brightness, or intensity
           factor of the Luma signal.
```

12-bit Luminance.

20-bit Polar Color Definition.
(Where **Chroma** scaling for R & θ° is assigned 20 Bits)

2^{13}:1 Contrast Ratio, 2.6 Γ (Gamma), D65 White Point, Expanded 6 **Color** Gamut encompassing DCI-P3, Pro 400h, Vision 3 & Portra 400

Matrixing

Let:

	Ranges	nm	3 Primary x	3 Primary y	nm	+3 Secondary x	+3 Secondary y
R = Red	−½ to 1	620	0.691	0.308	492	0.100	0.341
G = Green	−¼ to 1	539	0.220	0.750	−539	0.359	0.111
B = Blue	0 to 1	467	0.136	0.053	571	0.450	0.550

1931 CIE Color Gamut Graph

```
λ = Matrixed B & W     Luma sub-channel.
U = Matrixed Blue    Chroma sub-channel.   U #3300FF 252.00°   -U #CCFF00  72.00°
V = Matrixed Red     Chroma sub-channel.   V #FF0055 340.00°   -V #00FFAA 160.00°
W = Matrixed Green   Chroma sub-channel.   W #00FF33 132.00°   -W #FF00CC 312.00°
                                                  HSV Hue            HSV Hue
Enhanced channels:
I = Matrixed  Peach  Chroma sub-channel.   I #F96D00  26.27°   -I #008CF9 206.27°
Q = Matrixed  Pink   Chroma sub-channel.   Q #E700FB 295.22°   -Q #14FB00 115.22°
```

For 3 **Color** Gamut use D65 White Point,
1st **TruColor™**, 2^{13}:1, 2.6 Γ, DLP or Laser
2nd **DCI-P3** , 2^{13}:1, 2.6 Γ, DLP or Laser
3rd **sRGB** , 2^{12}:1, 2.4 Γ, CRT or LCD
(Page 22)

We have:

$$\lambda = +1/7 \times B + 2/7 \times R + 4/7 \times G$$
$$B - \lambda = +6/7 \times B - 2/7 \times R - 4/7 \times G$$
$$R - \lambda = -1/7 \times B + 5/7 \times R - 4/7 \times G$$
$$G - \lambda = -1/7 \times B - 2/7 \times R + 3/7 \times G$$
$$G - \lambda = -\tfrac{1}{4} \times (B - \lambda) - \tfrac{1}{2} \times (R - \lambda)$$

[W, B−λ Scaled with √3/2]

Encode:

$$\text{If:} \quad U(x) = \sqrt{3}/2 \times (B - \lambda) \times 0° \quad V(y) = (R - \lambda) \times 90°$$] Quadrature Sub-Carrier
$$\text{Then:} \quad W = \sqrt{3} \times (G - \lambda) @ 240°$$

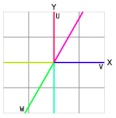

$$\text{Chroma Vector} \quad R = \sqrt{U^2 + V^2}$$
$$\text{Chroma Hue} \quad \theta = [\text{aTan2}(V,U) ; \text{If } \theta < 0 \text{ Then } \theta + 2\pi]$$

Decode:

		SyncDet
U: B − λ =	-┼- @	0° ÷ √3/2
V: R − λ =	-┼- @	90°
W: G − λ =	-┼- @	240° ÷ √3

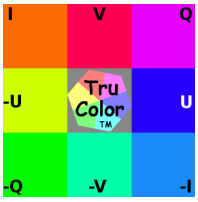

100% Color Bars

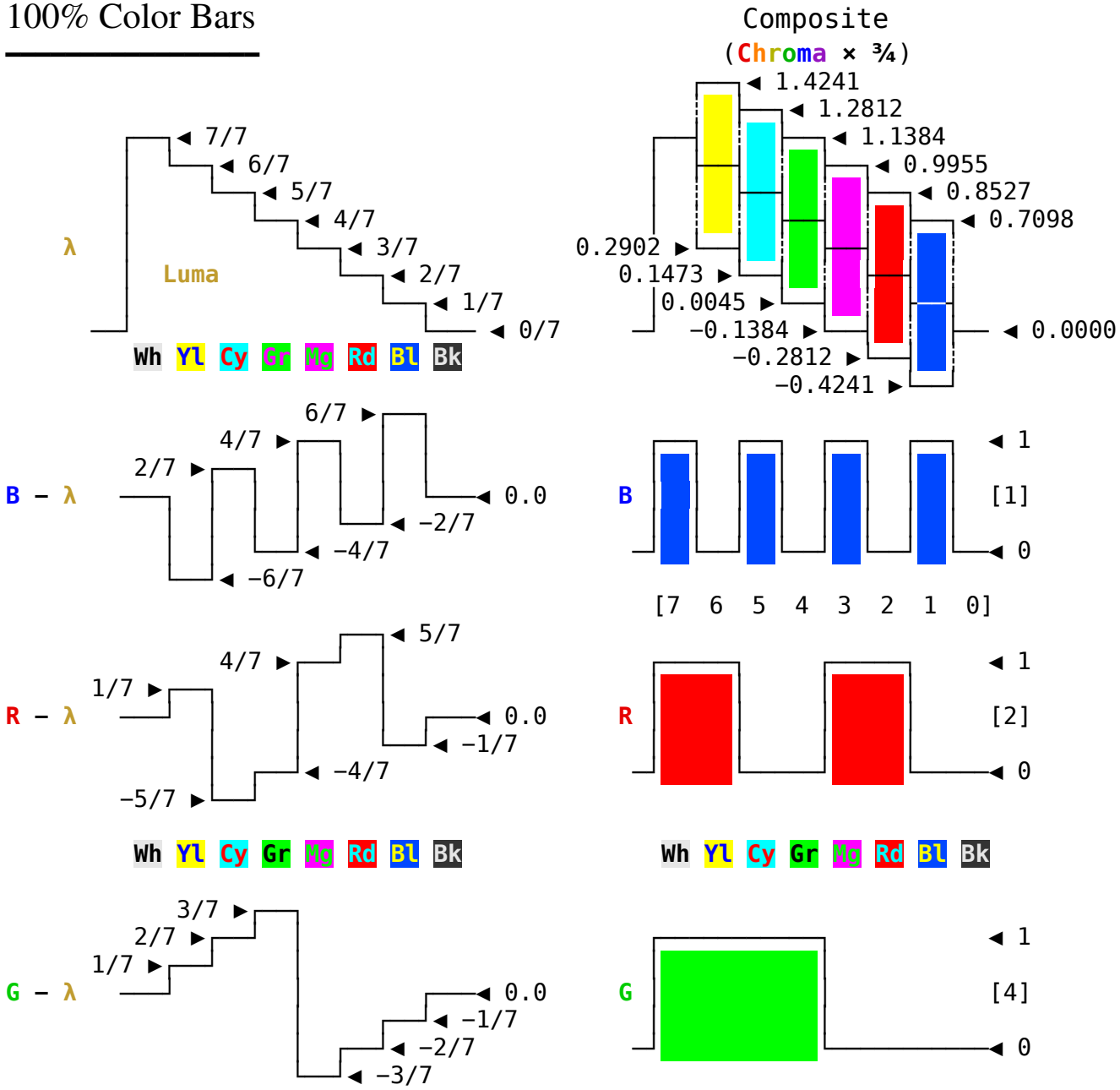

Color Bar	Luma Level	Rectangular Chroma U×√3/2	Rectangular Levels V	Polar Chroma Hue θ	Polar Chroma Peak Level
White	100.00%	N/A	N/A	N/A	N/A
Yellow	85.71%	−3×√3/7	+1/7	169.11°	2/√7
Cyan	71.43%	+1×√3/7	−5/7	289.11°	2/√7
Green	57.14%	−2×√3/7	−4/7	229.11°	2/√7
Magenta	42.86%	+2×√3/7	+4/7	49.11°	2/√7
Red	28.57%	−1×√3/7	+5/7	109.11°	2/√7
Blue	14.28%	+3×√3/7	−1/7	349.11°	2/√7
Black	0.00%	N/A	N/A	N/A	N/A

The composite Chroma × ¾ scaling for all colors with full saturation produces a level of **0.5669**pk or **1.134**p-p when modulated. When combined with Luma the Luma + Chroma peak for Yellow is at **142⅖%**, and Blue is at **-42⅖%**, slightly more foot room than PAL for Blue when composite scaling is applied with sync + setup added.

There is a 60° separation between the MgRdYlGrCyBl color axes respectively for the composite Chroma and all Chroma levels for each color at full saturation are equal to each other thus creating a perfect hexagon in the vector image.

The Enhanced Chroma Channels:

Peach	(I)	135°	(V − U) ÷ √2
Pink	(Q)	45°	(U + V) ÷ √2

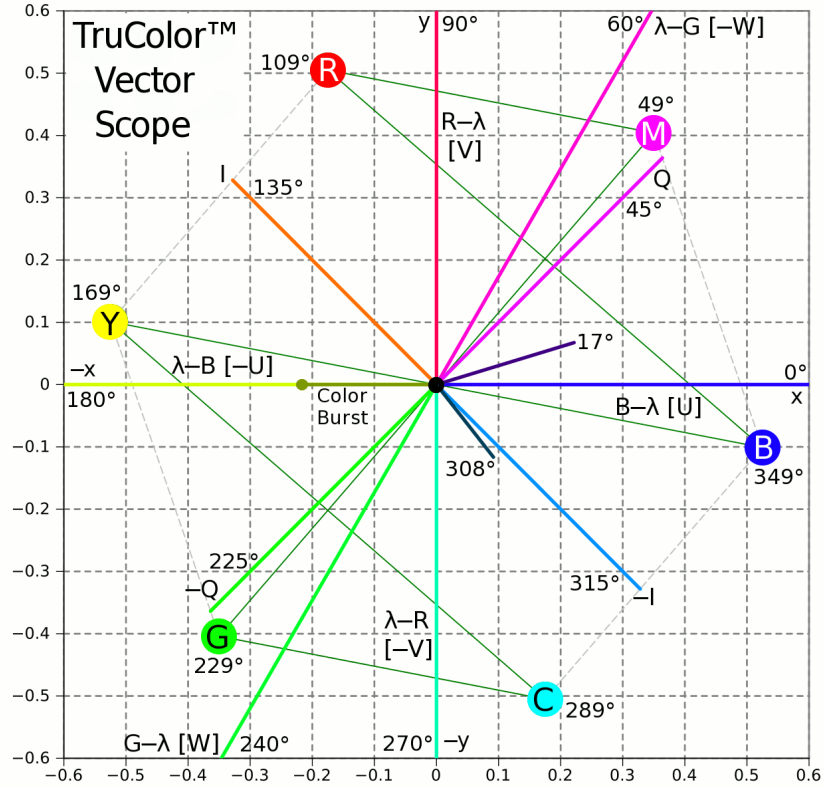

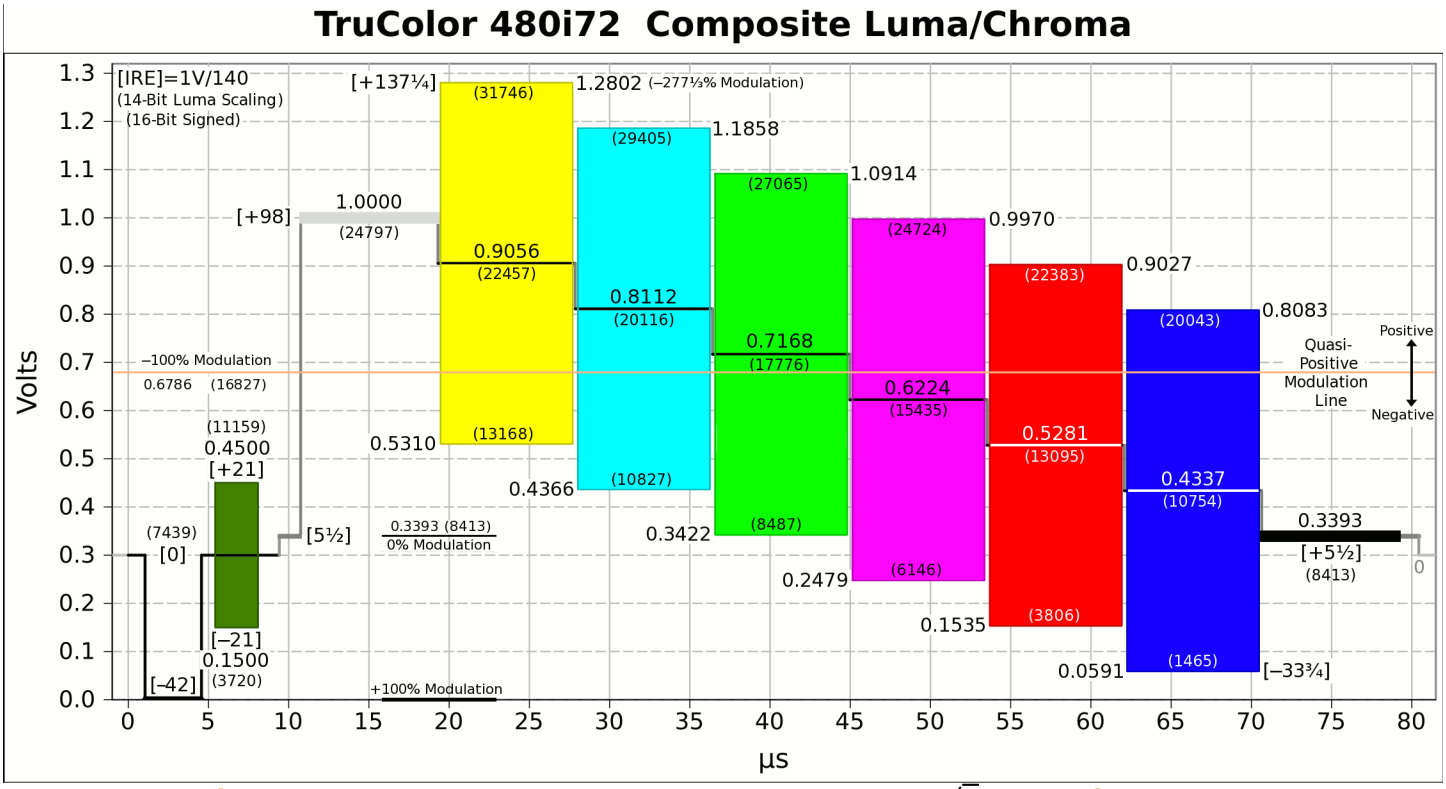

Graphically the Chroma signal levels in the vector image above are scaled @√2/2 for a Luma of 0 to 1. Composite image with updated IRE levels is scaled with a Luma of [92½] (0.6607), Chroma @¾ & SetUp of [5½].

Analog Scaling

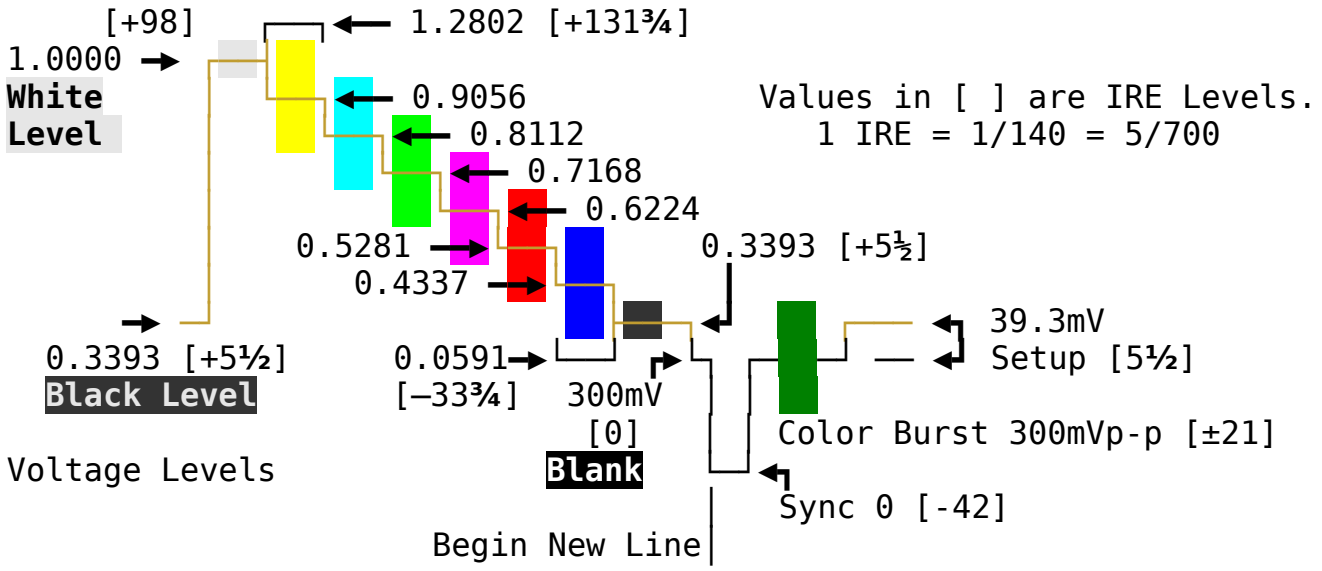

λ = Luma ; Chroma = Quadrature -┼- × Chroma Reduction ¾ [105]

Composite = (Luma + Chroma) × 0.660714286 + 0.339285714 (sync + setup [47½])
[92½]

For a 1Vp-p B & W video signal with sync 0.6607 composite scaling is used with a Chroma level of 749mVp-p for each color, on par with the Luma : Chroma NTSC RMS ratio. Blanking level is exactly 300mV [−42]. ColorBurst is 300mVp-p [±21], centered on blanking level, 150mV [−21] to 450mV [+21].

Digital Scaling

Digital scaling uses Luma & Chroma values prior to composite scaling. The power factor is for A/D and does not include the analog display gamma correction. The extra bit can denote motion.

Luma λ , Where $0 \le \lambda \le 1$
14-Bit Scaling = $\lambda \times 16383$ [Power Factor 2.109532^{13} ; 8192:1 Contrast]

Chroma Vector $R = \sqrt{U^2 + V^2}$, Where $0 \le R \le 2/\sqrt{7}$
12-Bit Scaling = $R \times (12384.38 \div 2/\sqrt{7})$ [Power Factor 2.193173^{12}]

Chroma Hue θ = [aTan2(V,U) ; If $\theta < 0$ Then $\theta + 2\pi$]
9-Bit Scaling = $\theta \times (511 \div 2\pi)$, Where $0 \le \theta \le 2\pi$

The natural Chroma phasing here will set the colors at:

Red @ 109.11° , Green @ 229.11° , Blue @ 349.11°

this is different than the NTSC/PAL spacing, but to align the hue with the standard HSV space and to place Red at 0° rotating the phase by -109.1066° is desirable before bit scaling is done. In order to produce a balanced color wheel for the Chroma signal, placing the MgRdYlGrCyBl axes 60° apart, the RGB weighting for the Luma is balanced to integer ratios of:

Red @ 28.57% , **Green** @ 57.14% , **Blue** @ 14.29%

which are the fractions 2/7, 4/7, and 1/7 respectively and the **U Chroma** channel was reduced by $\sqrt{3}/2$, Sin(60°), before quadrature matrixing . When the standard color bars are processed an even level stair step for the **Luma** signal is produced. This is a slight variation from the **YUV Luma** weighting used for NTSC/PAL which is:

Red @ 29.9% , **Green** @ 58.7% , **Blue** @ 11.4%

and is not a noticeable difference for the black & white portion of the signal.

While this is defined as a 32 bit encoding it could be defined with 24 bits or less as well but with lower resolution. Defining both the **Luma** and **Chroma** as levels and the hue as a phase allows for more efficient use of the assigned bits. Regarding phase this could be defined as a palate with non-linear assignment around the color circle to optimize the color perception of the eye and/or scene optimization of image. This palette also could be dynamic as the scene changes. For the more sensitive hues to the eye and/or scene use smaller steps and in the less sensitive areas larger steps thus reducing the number of bits necessary for the same color range. The eye is also less sensitive to color saturation than to overall intensity so having both the **Luma** and **Chroma** intensity channels separate from the hue allows for better **Luma**/**Chroma** bit balance for best fidelity. Dithering of the **Chroma** signal in both hue and level would also help to minimize the perception of using a lower bit level.

For example: **24** bit = **8 Hue**, **7 S**aturation, **9 Luma**

NOTES:
The '**λ**' (Lambda) symbol is used for the **Luma** instead of '**Y**' to differentiate the altered **Luma** weighting from the standard NTSC/PAL weighting.

The '**Σ**' (Sigma) symbol denotes that this HS**λ** color space uses a sum/difference method to matrix the **Red**, **Green**, and **Blue** signals into the **Luma** & **Chroma** channels and not a scaling percentage for the **Chroma** saturation.

Copyright ©2012, ©Jan2017 - J. S. Gilstrap (KD5TVJ) All Rights Reserved.

Chroma Rotary Phase™

Vector [phase] rotation by 90° for each horizontal line is a process used in VHS video recording for the **Chroma** signal. The lack of signal stability in the tape's higher frequency range is inadequate to record the **Chroma** signal but in the lower frequencies it is minimal but is still present. The head azimuth angle used to eliminate adjacent track cross-talk in the higher frequencies for **Luma** recording is ineffective in the lower frequencies. Vector [phase] rotation increases signal stability and cancels out adjacent track cross talk which would degrade the signal.

The **Chroma** signal is heterodyned down to 629kHz in a process called color under. During the heterodyning process the mixers use an oscillator with quadrature outputs that rotates the mixer phase by 90° for each line in opposite directions for each head so the phase will rotate through 360° in 4 lines before repeating and thenbeing put onto tape. During playback they are up converted back to the original sub-carrier frequency and the mixer phases are rotated in opposite directions reversing the rotations and restoring the **Chroma** to its original phasing. A comb filter is used during playback to cancel out cross talk and phase jitter.

Chroma Rotary Phase™ can be used to reduce **Chroma** signal degradation during transmission. The **Chroma** modulators will rotate the two sub-carrier phases by 90° per line for the **U** & **V** signals in opposite directions instead of for each head as it is done in VHS. In NTSC the **Chroma** sub-carrier frequency is an odd multiple of ½ the horizontal frequency which causes the clusters of **Chroma** energy to sit in between the clusters of **Luma** energy in a process called interleaving. As a result each horizontal line ends with only ½ cycle of the **Chroma** sub-carrier inverting the phase 180° for both **U** & **V** in relation to the previous line on the screen. This is sometimes seen as a diagonal dot crawl pattern on the screen. When phase rotation is applied it also causes the vectors on screen to rotate in opposite directions compared to the electrical signal.

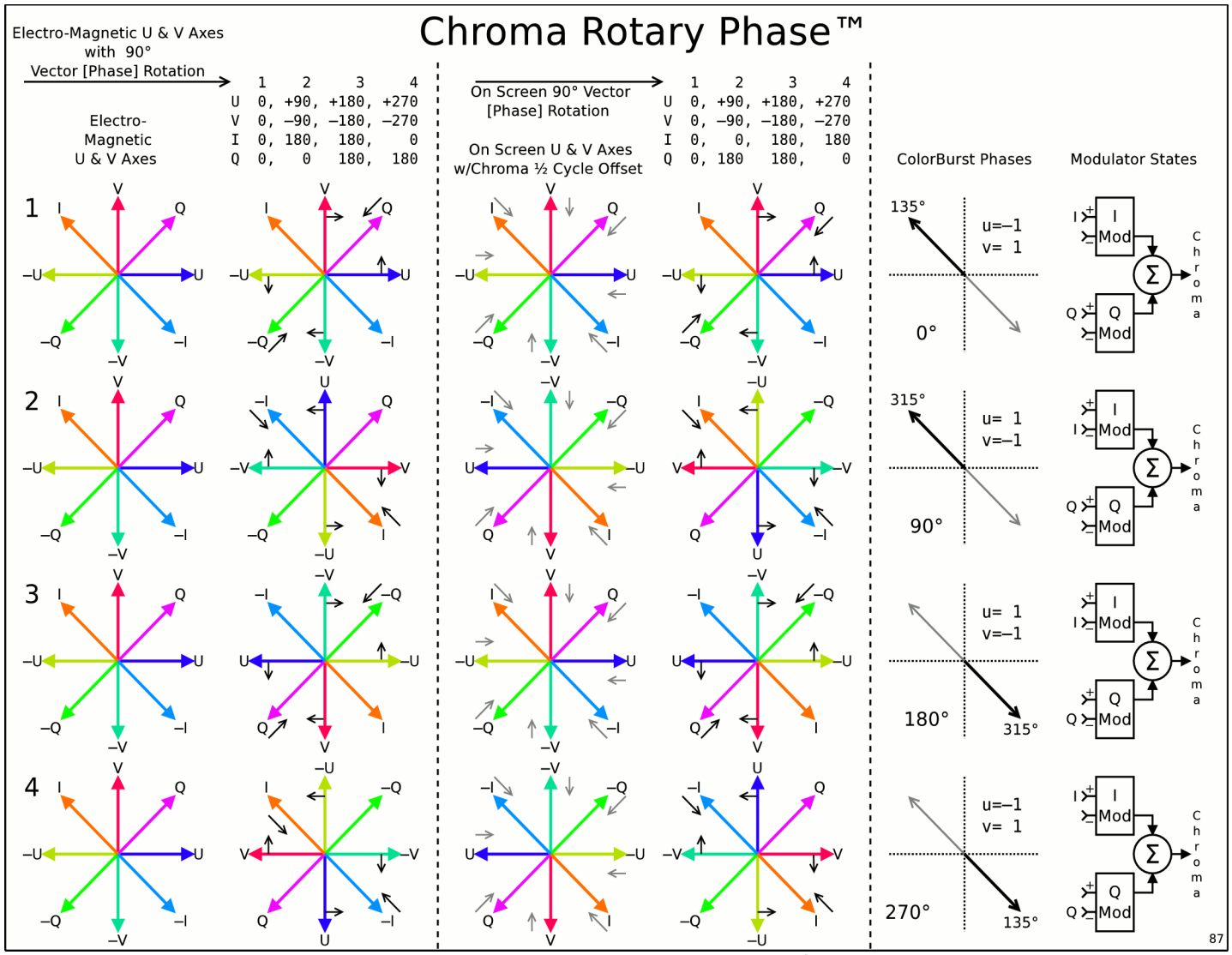

In the image above are 4 video lines labeled 1, 2, 3, & 4. The 1st column of vectors are of the **U** & **V** electrical axes. The 2nd column of vectors are of the **U** & **V** electrical axes rotated 90° per line. The 3rd column of vectors shows the natural phase inversion created by each line ending with only ½ cycle of the **Chroma** sub-carrier inverting the phase 180° for every other line as displayed on screen but in reference to the **ColorBurst** PLL lock the phase has not inverted. The 4th column shows how the vectors are positioned on the screen when the **U** & **V** axes rotate by 90° per line. The 5th column shows how the **ColorBurst** angle is used with each rotation for identification. In the 6th column are the **I** & **Q** modulators and how the modulating signals are applied for each line. Line 1 is normal having the **I** & **Q** signals sent to their respective modulators. In line 2 the **I** modualtor swaps phase. In line 3 the **Q** modulator swaps phase. In line 4 the **I** modualtor swaps phase. Returning to Line 1 the **Q** modulator swaps phase and process then repeats itself for another set of 4 lines. To decode the rotation process is reversed at the receiver and the use of a comb filter provides an added benefit.

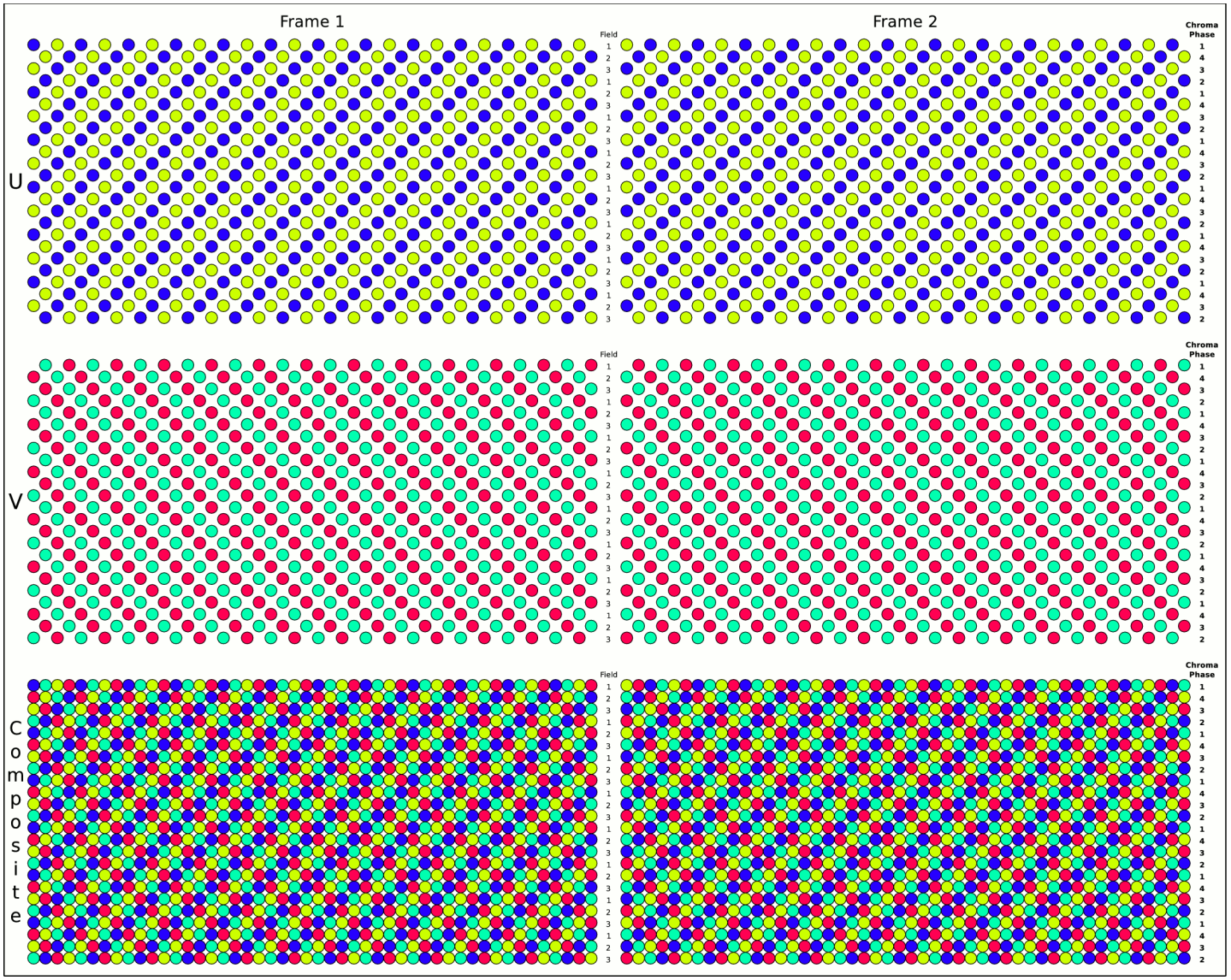

Next are the dot patterns for regular NTSC Chroma.

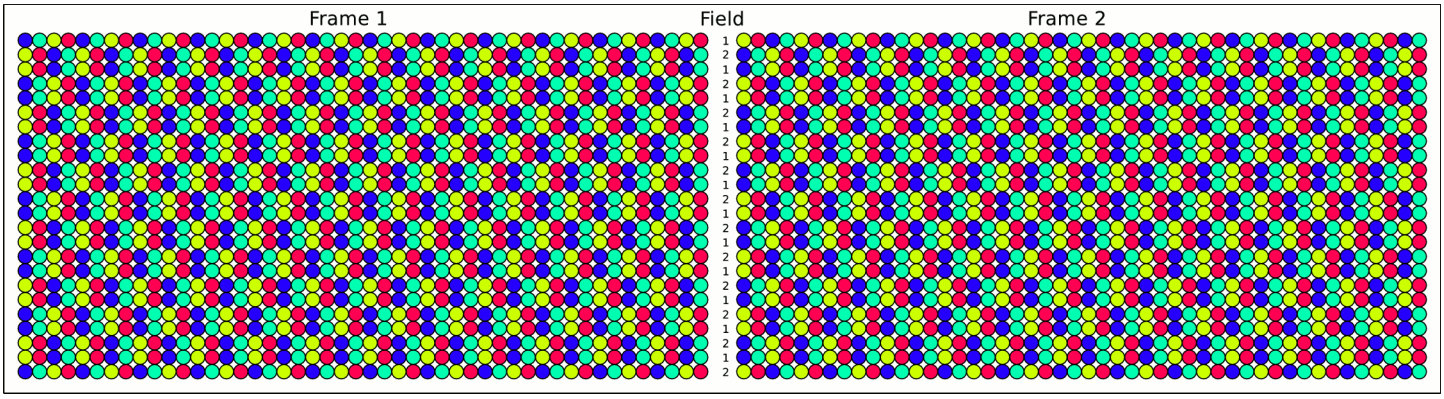

Using a 3:1 interlace with a ⅔ line offset allows the use of an even number of lines per frame providing a 2 frame repeat rate when using Chroma Rotary Phase™. The dot pattern is a little less randomized than a PAL 2:1 interlace but a little more than the regular NTSC Chroma 2:1 interlace. Whether the randomness with a 2 frame repeat rate is enough to outweigh the other two 2:1 interlace modes is unknown. The U & V patterns are completely diagonal at 45° per frame whereas the NTSC Chroma 2:1 interlace have the same pattern between fields for line pairs which are also at 45°. Interlacing is accomplished by delaying the vertical sync pulse by a fraction of a line. For a 2:1 interlace the delay would be ½ line using an odd number of lines or for a 3:1 interlace it would be ⅔ line where the number of lines per frame divided by 3 would produce the number of lines per field ending with ⅔ line. On screen field 2 would start ⅔ line later than field 1 and field 3 would start

⅔ line later than 2. Unfortunately this would produce a larger and less uniform Chroma pattern than either of the other 2:1 interlace methods. To eliminate this and produce a uniform rotation pattern on screen the sync in field 1 starts on line −2 instead of line 1 within a frame shifting all the lines in field 1 down by 1 on screen. This will allow the use of the most optimal lines to start the fields within the 4 line Chroma Rotary Phase™ repeat pattern. The 1st line in the odd frames on screen will start the 4 line Chroma rotation pattern at the beginning and every other frame line will have the U & V Chroma axes swapped as it is in every other field line but the 4 line rotation pattern is reversed from the field rotation direction. The even frames will start the Chroma rotation pattern in the middle to produce the 2 frame repeat rate.

On page 10 are the Composite, U & V dot patterns for a 3:1 interlace. On the bottom right is the pattern for the I & Q vectors. When any Hue falls on either one of these axes it will generate the same pattern as standard NTSC Chroma with the only difference in the pattern is that the I & Q line pairs are not on the same two lines but are offset by one line. This is of no consequence compared to NTSC since a Hue will fall on either one or the other axis however for the 3:1 interlace the dot crawl pattern will manifest itself different than it would for a 2:1 interlace. This will apply for all Hues and the angles of the dots will vary from vertical pairs at 45° if they fall on an I or Q axis to a pure ±45° if they fall on a B−λ or R−λ axis. The U & V Chroma axes swap on a per line basis instead of line pairs within a frame as it would be for a 2:1 interlace will make any Hue error effects on screen twice as fine if a comb filter is not used. It is the 3:1 interlace and selectively starting the fields within a frame with a 4-2-3 pattern that makes the Chroma rotation pattern lay down in this way on screen.

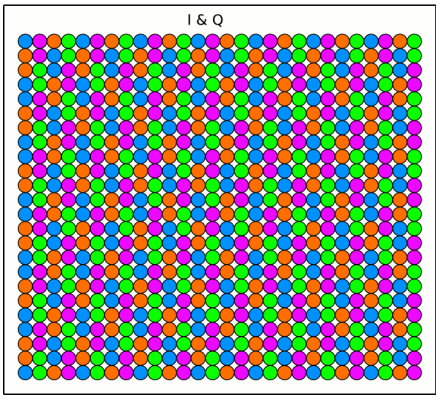

PAL On Screen Vector Rotation & Vswitch Animation

For transmission using a mostly suppressed carrier for the composite video not including sync (zero carrier modulation by Luma at 50% gray, or another fixed level that minimizes carrier level on average program material [−12dB PEP?], or a content variable level carrier to maximize carrier suppression on a per scene basis) with synchronous detection of the I channel will greatly improve transmitter efficiency and signal reception integrity. Only the ColorBurst, color modulation and Sync pulses will rise above the Luma PEP level with the sync pulses being the strongest. CarrierBurst tracking will happen during the sync pulses with a 0° phase angle, the same way the ColorBurst does. The ¾MHz vestigal sideband provides space for a Q channel on the main carrier. This could be used for a digital channel for 5.1 audio, Luma HF information for upscaling, motion assist, or other data services.

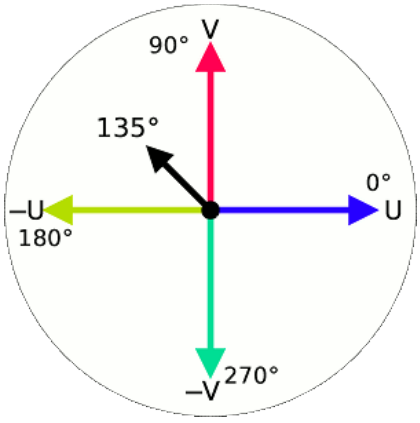

Chroma Rotary Phase U & V Vector Rotation Animation

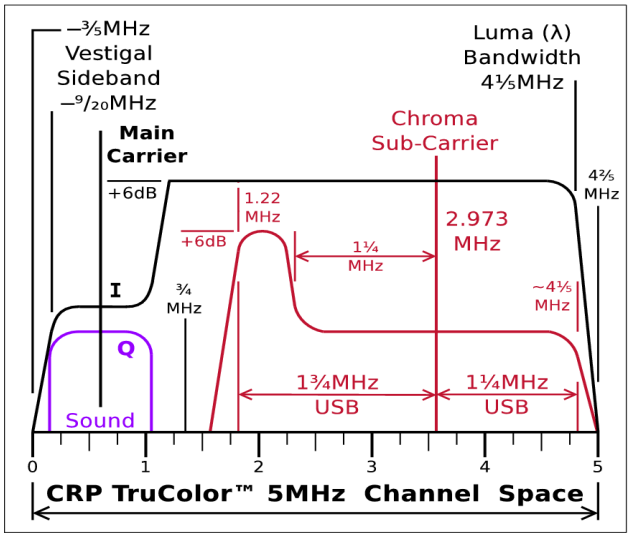

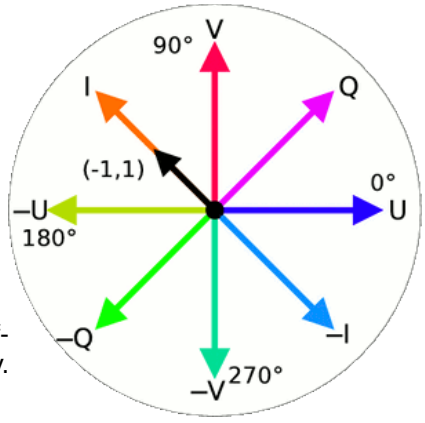

PAL ¾ off-set equiv.

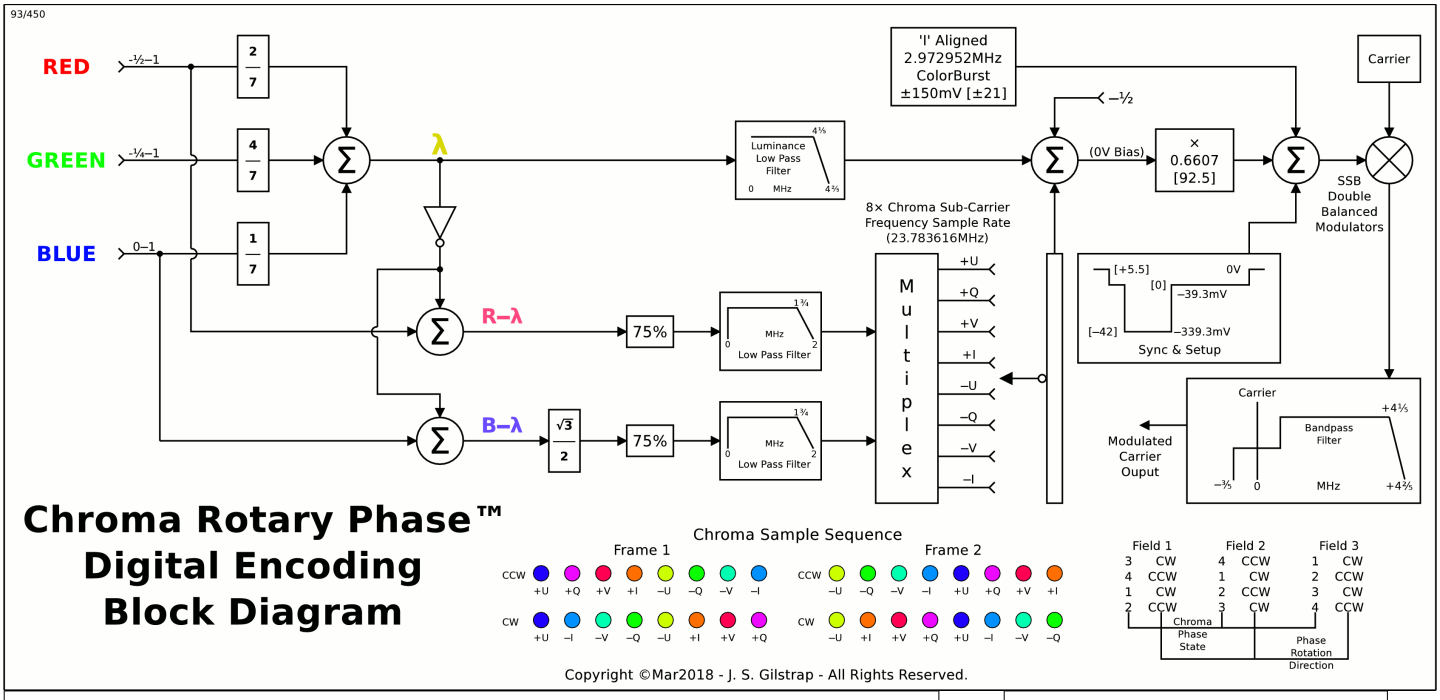

Copyright ©Mar2018 - J. S. Gilstrap - All Rights Reserved.

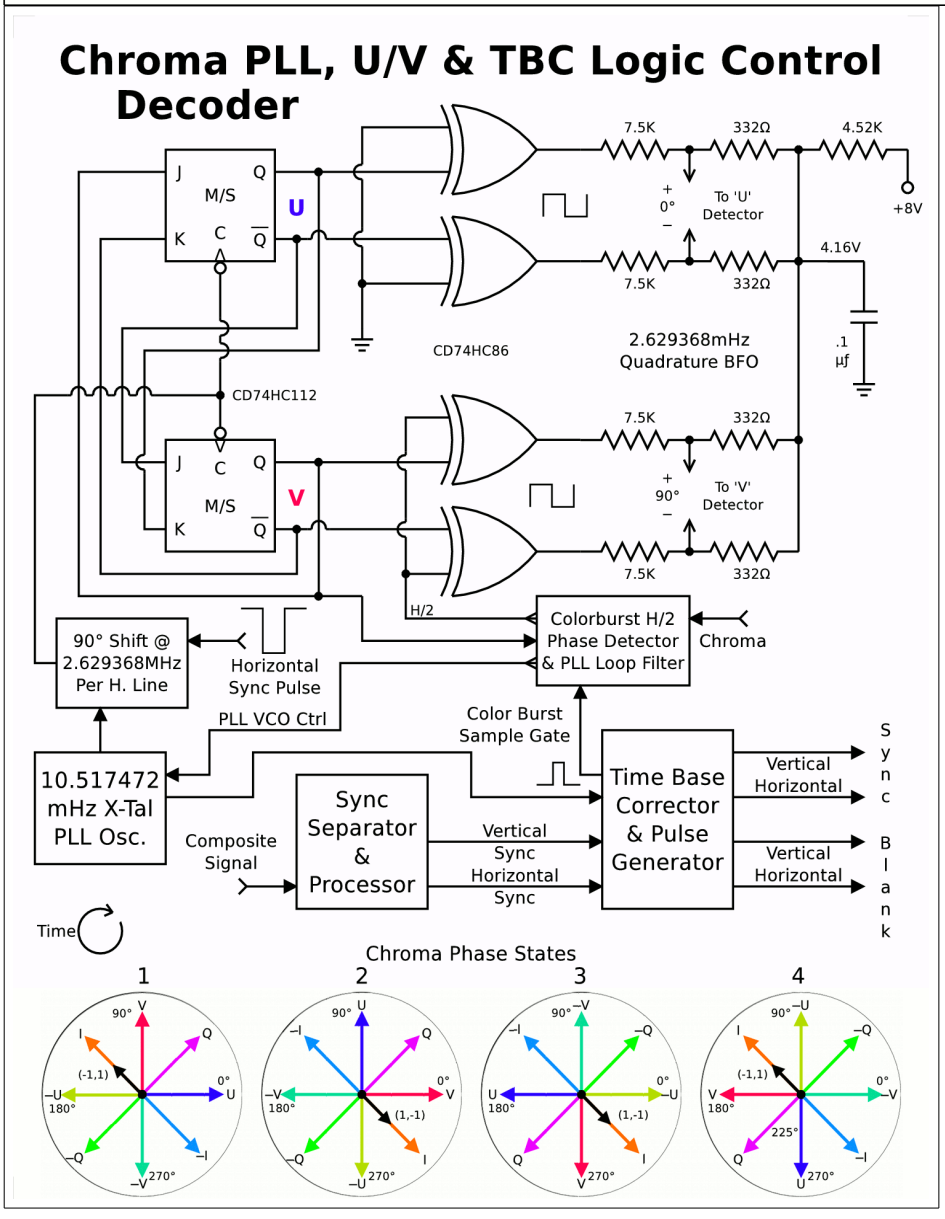

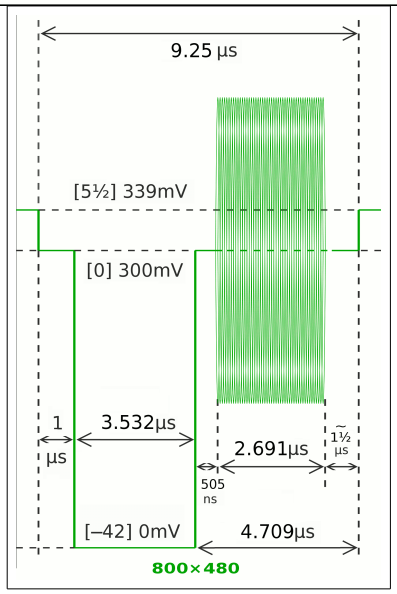

By rotating the BFO by 90° per horizontal line in the same direction for both **U** & **V** detectors in the direction that tracks the **U** channel for proper detection the detected **V** channel output is then converted to PAL toggling its phase at H/2. If the colorburst signal is always aligned with the **I** channel then it to will behave as a PAL colorburst signal to drive the **V** switch. This fool proof solution also eliminates any need for a prime line that would be needed to facilitate chroma lock. Lock would occur as it does in PAL. The colorburst phase detection output is then taken from the **V** detector as in PAL prior to the **V** switch for both the PLL & **V** switch control.

Video Harmonics: Coarse Mesh Cluster & Fine Mesh Interleaving

In PAL with a 2:1 interlace when the Chroma U channel is at the ½ offset as it is in NTSC it does not interfere with the Luma but when the V channel in the same spot is switched at the H/2 rate V is sub-modulated creating a ±H/2 DSB-SC signal. With the sub-modulating carrier of H/2 being in the kHz range and the modulated Chroma sub-carrier bandwidth in the MHz range the upper and lower sidebands of the H/2 sub-modulation almost completely overlap. With the combining of the sidebands along with the U channel if the harmonics overlap they will either reinforce and increase in strength or nullify and create Fukinuki holes. Having the Chroma sub-carrier lie in the ½ center offset between the Luma clusters the V sub-sidebands are displaced at ±H/2 causing the center of the upper and lower sub-sidebands to fall directly on top of the Luma clusters creating direct interference and making them impossible to separate. To eliminate this the Chroma sub-carrier is placed at the ¾ offset instead of the ½ offset and the ±H/2 V sub-sideband centers fall on the ¼ offset or for PAL-M in Brasil the sub-carrier is at the ¼ offset and the ±H/2 V sideband centers fall on the ¾ offset. The ¼‖¾ offset of the U channel sub-carrier does not cause interference with the Luma either.

While this eliminates interference on both the coarse and fine mesh spectrum between the Luma, U & V channels it creates another problem, objectionable on screen standing Chroma dot patterns thus breaking the on screen Chroma dot pattern of NTSC which is designed to be inverted on every other frame averaging out the Luma brightness. To eliminate this on screen pattern problem the Chroma sub-carrier frequency is shifted by the number of cycles in a frame thus causing the on screen dot pattern to invert 180° at the beginning of each field to break up the pattern. Combining this with the 4 unique states of the V switch, odd number of lines per frame and 2:1 interlacing it takes 8 fields or 4 frames before on screen Chroma phasing repeats. Shifting the fine mesh spectra of the Chroma by 1 frame rate does not cause interference to the Luma as the new slots for the Chroma harmonics are also empty, not being occupied by Luma harmonics, but it does make every Luma/Chroma line combination unique for the 4 frame repeat pattern. While this solves the Luma/Chroma interference issues and the on screen dot pattern problems, inverting the Chroma sub-carrier on screen dot pattern by shifting the Chroma sub-carrier frequency by 1 frame rate causes the sub-carrier to creep 1 cycle per frame. This creates additional issues with advanced digital decoding and processing, having way too many more than 4 unique Chroma scan line patterns makes the math all that much more complicated.

While PAL solved the drifting hue issues of NTSC each change created another issue for which another solution was necessary. The V switch feature/bug caused Luma interference which was solved by placing the sub-carrier on a ¼‖¾ offset instead of the ½ offset. The offset feature/bug created the standing on screen dot patterns which was solved by increasing the sub-carrier frequency by 1 frame rate. In the end the Luma/Chroma sub-carrier relationship of PAL is inherently more complex than NTSC and when digital processing with 3 line 3-D comb filters and frame storage came along NTSC with its Luma/Chroma simplicity naturally lent itself to complete Luma/Chroma separation for static images via temporal frame storage and for motion simple 3 line comb filters provided good enough separation. Having enough Luma/Chroma separation the drifting hue issues mostly disappear as it does in S-Video sources since varying Luma levels was the main cause especially with the old tube Chroma decoders. The newer transistor or IC decoders have much better DC tracking in the colorburst loop filter along with some correction signals transmitted during the vertical blank to help minimize hue errors. Multipath signal degradation of NTSC can still cause significant hue errors whereas PAL mostly corrects for this with some loss in color saturation and is one of the the saving graces that PAL still has over NTSC now. With PAL digital processing is less glamorous but still beneficial. More complex algorithms and increased compute power are needed to achieve comparable results although the level achieved with PAL is still not as good as it is with NTSC.

This detour into PAL is a good description with what happens when a Chroma sub-carrier is sub-modulated at a fractional rate of the horizontal frequency, the issues it creates and the solutions used to address them. For a more detailed description many articles about PAL since its inception in the early 1960s are probably available. This description is here since Chroma Rotary Phase™ also uses Chroma sub-carrier sub-modulation but is a more elegant approach than PAL. As with PAL it automatically corrects for hue errors but also eliminates instead of creating Luma/Chroma fine mesh spectral interference when a normal NTSC Chroma modulation is used with a 3:1 interlace. A cleaner implementation avoiding the pitfalls that PAL creates and with the 3:1 interlace Hanover lines are created instead of bars. A balanced solution with an on screen Chroma dot pattern that is more uniform with a natural 2 frame repeat rate. On a per frame basis if the hue falls directly on the U or V axis the Chroma dot pattern is identical to NTSC with line pairs of vertically aligned dots which create a diagonal pattern. Only when the hue falls directly in the middle of the U & V axes is a pure diagonal line of dots created. This predictable dot pattern makes it as simple to process digitally as NTSC.

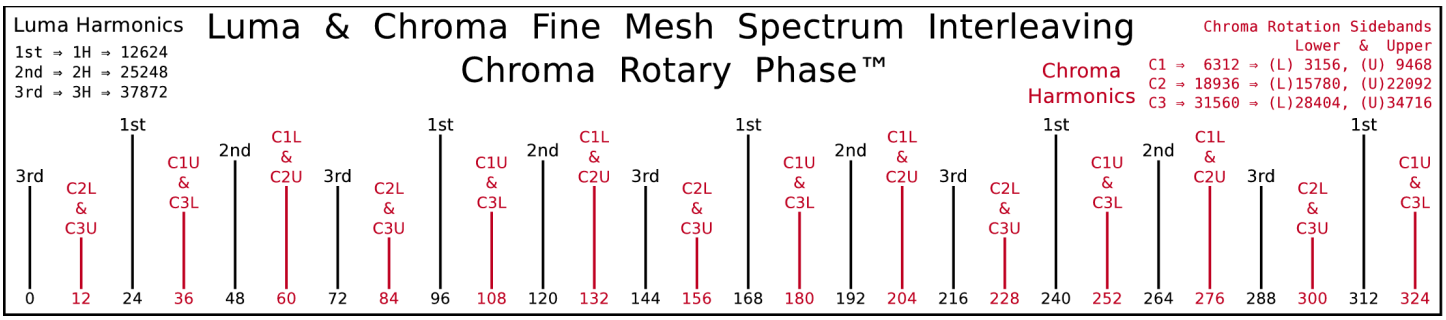

In the image above using a 3:1 interlace the normalized spectrum distribution of **Luma** with **Chroma** Rotary Phase™ is shown at the fine mesh level. The 3:1 interlace with a 72Hz field rate ending with ⅓ line causes the **Luma** and **Chroma** harmonics to be placed at 24Hz intervals which is also the frame rate. As with NTSC **Chroma** the sub-carrier is placed at an odd multiple of ½ horizontal rate so at the coarse mesh level the **Chroma** clusters will lie in the center between the **Luma** Clusters. When a conventional NTSC Chroma modulation method is used with a 3:1 interlace the fine mesh **Luma** and **Chroma** adjacent cluster harmonics do not interfere with each other but interference does occur 1½ clusters away from each other and then every 3rd cluster after that. **Chroma** Rotary Phase™ offsets this causing all **Chroma** harmonics to fall evenly between all **Luma** harmonics at the fine mesh level in a **Luma**/**Chroma** 12Hz interval throughout the combined **Luma**/ **Chroma** spectrum. This is because both **Chroma** channels are sub-modulated at the H/4 rate creating a ±H/4 DSB-SC signal in which the sidebands are centered on the ¼ & ¾ offsets. Having the **Luma** and **Chroma** fine mesh harmonics spaced at 24Hz intervals for cluster triads and that H/4 is not evenly divisible by 24 but is divisible by 12 with a quotient that is odd means that all **Chroma** harmonics are shifted by ±12Hz off center thus moving them away from interference with the **Luma** and placing them exactly centered in between them. The H/4 modulation also creates overlapping **Chroma** harmonics from the upper and lower sidebands in a triad configuration of: C1U & C3L, C1L & C2U, and C3U & C2L. This is a repeating 3 cluster pattern even when shifting over 1 cluster at a time. A Fourier spectral analysis has not been done but for the overlapping harmonics it can be assumed that some may be constructive and increase in strength and others may be completely destructive and create Fukinuki holes. The most desirable outcome would be for **Chroma** harmonics which are from adjacent **Chroma** clusters and are centered within a **Chroma** cluster are constructive and those that are centered within the **Luma** clusters are destructive and are the ones creating the Fukinuki holes. For the **Luma** the reverse is not true as it is not sub-modulated. For both **Luma** and **Chroma** the harmonics for each cluster are spaced 72Hz apart and for a cluster triad there is a 24Hz offset between the 3 so the combined triad of harmonics creates the 24Hz interval. As with a 2:1 interlace the energy in between the **Luma** clusters is minimal and is where and why the **Chroma** clusters were placed there originally. The void of strong harmonics in between the **Luma** clusters for a 3:1 interlace is probably very similar to a 2:1 interlace. Even if the voids are not as defined as a 2:1 interlace the **Luma**/**Chroma** fine mesh harmonic separation at the 12Hz interval is as evenly spaced as NTSC's 15Hz interval which is FrameRate/2 for both.

To make all this work seamlessly it is the combination of **Chroma** Rotary Phase™ with a 3:1 interlace using an even number of scan lines per frame to fit together like puzzle and work synergistically. When the number of lines per frame is evenly divisible by 2 and the quotient is odd then the 4 line **Chroma** rotation pattern is advanced by 1 line per '½ frame' and over 4 '½ frames' (2 frames) the **Chroma** rotation pattern evenly repeats. When the number of lines per frame is divided by 3 the lines per field must end with ⅔ line to create the 3:1 interlace. A ⅔ line offset has some advantages over a ⅓ line offset, e.g. scan lines move down the screen but for sequential fields the line groups move up and this may help counteract any visual movement whereas ⅓ line offset causes field lines to sequentially move down the screen accentuating visually the top to bottom scan pattern. This movement is not an issue with a 2:1 interlace as it is an alternate blinking motionless pattern although with the 3:1 interlace the field rate is faster than NTSCi60 at 72Hz so this may help some. For CRTs greater phosphor persistance could be balanced to eliminate visible scan line movement without causing motion blurring. This becomes a non-issue if the image is de-interlaced for CRT progressive scan or is displayed on a flat panel which will be de-interlaced anyway.

Copyright ©Apr2018 - J. S. Gilstrap (KD5TVJ) All Rights Reserved.

Per Field Luma Separation 3 Line Processing For Non-Static Full Motion Image Areas

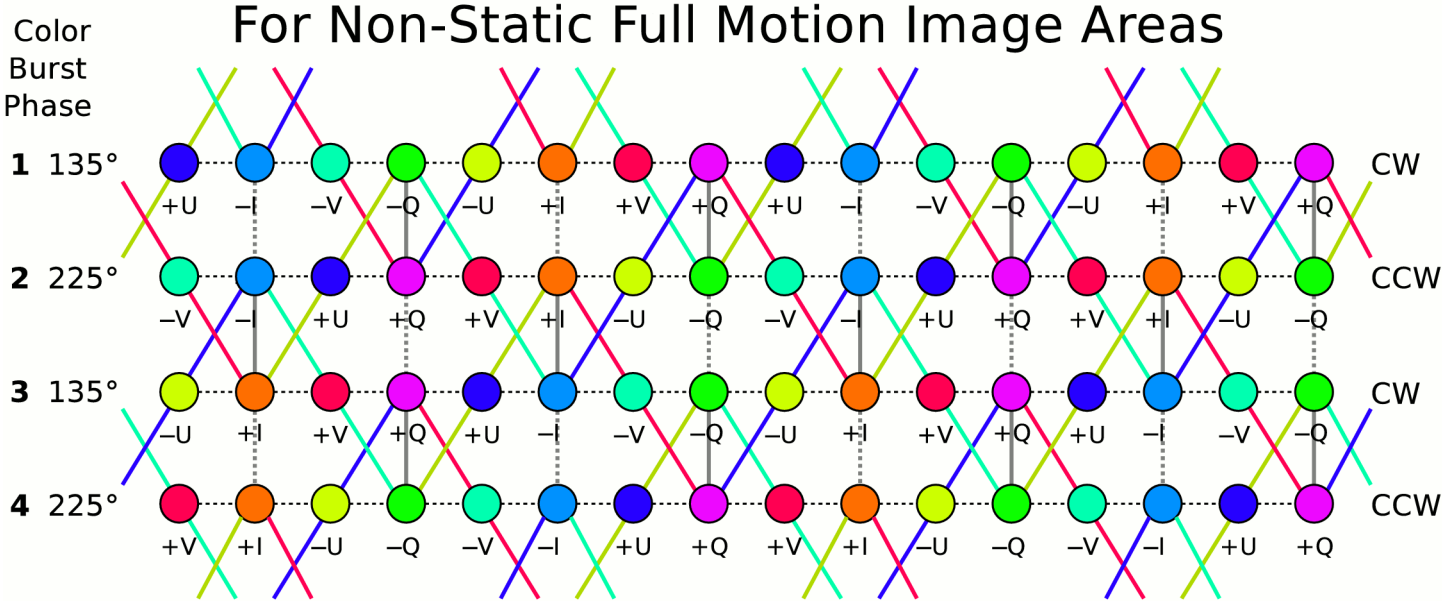

For **Luma** samples that fall on **U** or **V** **Chroma** Sample points there are 2 **Luma** samples from **I** & **Q** sample points from adjacent lines on the diagonal that when added together will form the complimentary color to cancel out the **Chroma** on each **Luma** sample. The mapping is shown via the complimentary color lines connected to an **U** or **V** sample and the associated **I** & **Q** samples. The ratio is $(\sqrt{2}:2:\sqrt{2})/(1+\sqrt{2})/2$.

For **Luma** samples that fall on **I** or **Q** sample points **I** or **Q** points directly above or below on adjacent lines are added or subtracted to cancel out **Chroma** on each **Luma** sample point. The mapping is shown via gray lines. Solid lines are additive and dotted lines are subtractive. The ratio is ±¼:½:±¼ .

Since **Luma** sample recovery on **U** or **V** sample points is all additive it provides noise reduction but **Luma** sample recovery on **I** or **Q** sample points have some S/N loss since adjacent lines are subtracted nullifing **Luma** but additive for the complimentary color that cancels out **Chroma** on the current line leaving only the **Luma** from the curent line but also the noise from the adjacent lines.

To average out this noise variation between the **I** & **Q** and **U** & **V** sample points the recovered **Luma** on a line can be a running average of 3 points in a ¼:½:¼ ratio or 5 points in a ⅘×(⅛:¼:½:¼:⅛) ratio. This averaging has minimal effect on sharpness since the sample rate is ~3¾ times the image resolution.

To eliminate **Luma** and obtain **Chroma** it can be as simple as subtracting adjacent lines from the current line as in NTSC with the ¼:½:¼ ratio. Unlike NTSC the adjacent lines do not contribute any to **Chroma** levels but just nullify the **Luma**. The **Chroma** on the adjacent lines are inverted to each other so when they are added together the **Chroma** is nullified. Inverting these 2 summed lines will produce inverted **Luma** which will nullify the **Luma** on the current line Leaving only the quadrature **Chroma** signal to be used for **Chroma** decoding. However this method does not correct for hue phase errors and some lines of **Chroma** resolution are lost nor does it produce the best S/N ratio.

Subtracting one line, above or below from the current line will eliminate the **Luma** and either the **I** or **Q** **Chroma** channel. This method will correct for hue phase errors and produce much better S/N ratio but the **Chroma** lines of resolution will be cut in half. Which **Chroma** channel that will be eliminated and which one will remain will depend on which chroma phase rotation the current line is using. **1**: 1-4 ⇒ +**I**, 1-2 ⇒ +**Q** ; **2**: 2-1 ⇒ —**Q**, 2-3 ⇒ —**I** ; **3**: 3-2 ⇒ +**I**, 3-4 ⇒ +**Q** ; **4**: 4-3 ⇒ —**Q**, 4-1 ⇒ —**I**. For positive values: 1-4 & 3-2 ⇒ +**I** ; 1-2 & 3-4 ⇒ +**Q** and for negative 4-3 & 2-3 ⇒ —**I** ; 2-1 & 4-3 ⇒ —**Q**

Since the **Chroma** sub-carrier is inverted 180° from frame to frame to average out **Luma** brightness two frames can be added or subtracted to obtain the **Luma** or **Chroma** respectively so motion free static image areas will produce full **Luma**/**Chroma** separation without any artifacts. This will produce the highest resolution and best S/N ratio but unless adjacent line **Chroma** information is incorporated with the current line any hue phase errors that exist will not be canceled out but will produce Hanover lines that may be visible and viewer must rely on visual blending for the correct hue.

To the right is the chroma dot sequence for a 526 line format using a ⅓ line offset. It shows the 2 frame repeat rate where the chroma dots are inverted on the even frames and the odd frames are non-inverted, or vice-versa, for an on screen per spot basis. The staggered vertical sync pulses cause the chroma dots to align diagonally on screen to create a uniform pattern. The dots are colored for the **U** & **V** axes where they each rotate 90° per line in opposite directions. This also causes **I** & **Q** to invert 180° every 2 lines in a flip-switch manner. In application it will be **U** & **V** that will flip-switch and **I** & **Q** will rotate 90° per line in opposite directions. The directions that **I** & **Q** rotate will depend on the **U** & **V** flip-switch order within the 4 line chroma repeat pattern. For a vestigial sideband chroma signal **I** & **Q** should rotate in the directions that optimizes **I**'s signal integrity if there is a significant difference in quality caused by vector rotation. The diagram uses the **U** & **V** colored dots because they are easier to view. As shown in previous diagrams dot colors for composite **I** & **Q** arrangements are hard to look at.

To view the full 526 lines of chroma rotation for 2 frames zoom in on the diagram to the right. You can also highlight the image within the pdf and copy it to the clipboard and then paste it onto an image editor like The GIMP or Photoshop.

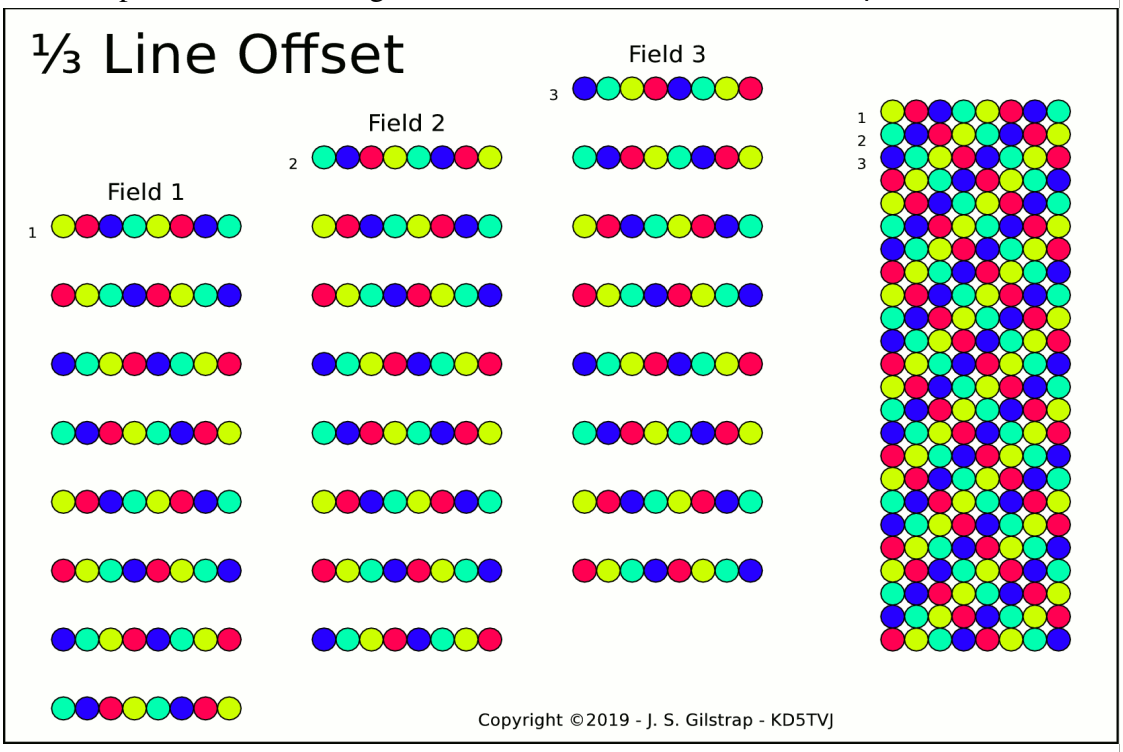

In the diagram above are the 3 fields of chroma dots separated out and also combined revealing the uniform diagonal pattern. In the left half the separated fields are vertically staggered to each other so the 4 line chroma repeat pattern is aligned between the fields. Field 1 starts with line 3 of a frame, field 2 with line 2, and field 3 with line 1. When assembled and properly staggered vertically the pattern on the right is realized.

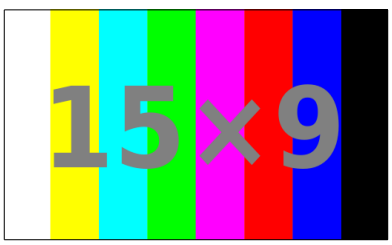

Standard Definition **FWVGA**

480i72 **24PsF** **15:9**

w/CRP™ for **5**MHz Channel Space

+36⅚% Better than **NTSC/PAL-M** Broadcast

fin ⅚ U.S. Channel Space. **2.93MHz Chroma**

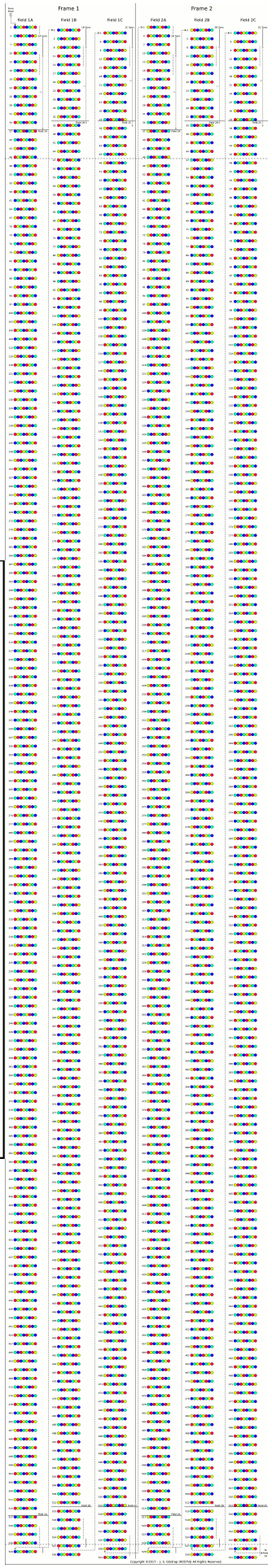

For the vertical scan a 3:1 interlace is used at a field rate of 72 Hz to produce the **F**ilm standard 24 frames per second. For a ⅔ line offset having the **1st** field arrive one line early in relation to the other two fields instead of 1 line later as for the ⅓ line offset should properly align the **Chroma** dot pattern diagonally. For the horizontal no sub-sampling will be used and the full refresh rate will also be at 24 frames per second, 41⅔ms. Using a 3:1 interlace at 72 Hz with 172⅔ lines allows the use of a lower horizontal scan rate providing increased definition of the **Luma** channel with a wider aspect ratio of 3:2. **Chroma** Rotary Phase™ will be used instead of NTSC **Chroma** since its dot matrix pattern works better with the 3:1 interlace while still offering a two frame repeat pattern but a **2.63**MHz **Chroma** sub-carrier frequency will be used. The vestigial sideband has been reduced to ⅗MHz and the **Luma** corner bandwidth is **4**⅕MHz with full cut at **4**⅖MHz to fit within a **5**MHz channel space. The PM sound sub-carriers are on the **Q** channel of the main carrier.

29⅙" diagonal, (25 "×15 "), 74 cm diagonal, (63½×38$\underline{1}$ cm), 793¾µm line pitch.
26¼" diagonal, (22½"×13½"), 66⅔cm diagonal, (57$\underline{15}$×34$\underline{29}$cm), 714⅜µm line pitch.
23⅓" diagonal, (20 "×12 "), 59¼cm diagonal, (50⅘×30$\underline{48}$cm), 635 µm line pitch.

General:

		Fair Contrast
Aspect Ratio	15:9 = 5:3 = 1⅔	111:80 ≈ 1.3874
Total Picture Pixels (Digital)	800×480 ; 384000 Pixels	666×480 ; 319680
Kell Factor (Analog Resolution)	566×340 ; 192000 Pixels	471×340 ; 159840
Maximum Digital Equiv. @-9dB	799×480 ; 383520 Pixels	565×340 ; 191760

Pixel Aspect 1.201:1
16:9 854×480 1.282:1

Vertical:

Frames Per Second	24Hz
Total Lines Per Frame	526 (2 Frame **CRP**™
Fields Per Second	72Hz Dot Repeat)
Total Lines Per Field	175⅓
Picture Lines	160
Lines Per Blank	15⅓
Blank	1.215ms
Sync	185µs ; 2⅓ Lines

Aspect Ratio × Super Pixel = FWVGA Resolution

$$\begin{bmatrix}25\\10\end{bmatrix} \times \begin{bmatrix}32\\48\end{bmatrix} = \begin{bmatrix}800\\480\end{bmatrix}$$

HD Wide

$$1\tfrac{1}{2} \times \begin{bmatrix}800\\480\end{bmatrix} = \begin{bmatrix}1200\\720\end{bmatrix}$$

$$2\tfrac{1}{4} \times \begin{bmatrix}800\\480\end{bmatrix} = \begin{bmatrix}1800\\1080\end{bmatrix}$$

Horizontal:

	Resolution Good:471	
Lines Per Second	12.624kHz Max:565 (-9dB)	
Period (**H**P)	80.438µs (471)	
Picture	69.964µs (416)	
Total Picture Pixels	489¾≈1⅔×**λ**BW×(HP-HB) ; (471+18¾)≈3$\underline{85}$%/2$\underline{69}$µs OverScan	
Viewable Picture Pxl/Line	471 ; 67.273µs (400×2	
Blank (HB)	9.250µs (55) DotClock)	
Front Porch	1.009µs (6)	32
Sync	3.532µs (21)	Scan
Back Porch	4.709µs (28)	Lines
		/Inch

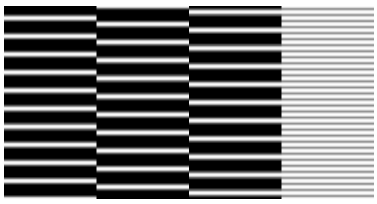

Luma & Chroma:

Luma (**λ**) Bandwidth @-3dB	4⅕MHz, FullCut 4⅖MHz, Vestigial ⅗MHz, Corner ⅖MHz	
Chroma:	Sub-Sampling 2⅖:1:1	**PAL**
Sub-Carrier	2.972952MHz	2.638692MHz
½H Odd Harmonic	471:**235½**:157	472½:**236¼**:157½
U Bandwidth	1¾MHz (USB +1¼MHz & LSB -1¾MHz)	**U** & **V** rotates in the
V Bandwidth	1¾MHz (USB +1¼MHz & LSB -1¾MHz)	direction to produce
Color Burst	2.691µs ; 8 cycles 2×(1½+8+4½)=28	PAL chroma dot pat-
Baseband Guard	¾MHz	tern with ¼ chroma
		sub-carrier offset.

Sound: Sub-Carrier on **Q** Channel of Main Carrier.

Armstrong PM² Stereo:	13½×H, 20½×H, 27½×H, Dev:±120°, BW:±35kHz
	SAP:170.424 L-R:258.792 L+R:347.16 , pg24
Equalization:	50µs Pre-Emphasis, Pole at 13kHz (12¼µs)
	2⅔ms Pre-Emphasis, Pole at 180Hz (884µs)
Processing:	Harmonic Peak PSNs 2×1ms 2:1 Linear Compression,
Frequency Response:	50Hz-15kHz @-3dB Attack: 1ms, Decay: 60ms
Digital COFDM:	Stereo: MP3, Vorbis. 5.1 Surround: Opus. + SAP
with **NB Mono** @ 27½×H	

↓↓ **Chroma** LoR/Freq: 107/¾MHz 214/1½MHz

800×480
Expanded to
1600
2×HorizSampl

353.472kHz
28×12432Hz
(47½ Lines)

492.336kHz
39×12624Hz
(66¼ Lines)

796.944kHz
56×12624Hz
(95⅛ Lines)

997.296kHz
79×12624Hz
(134⅙ Lines)

1.401264MHz
111×12624Hz
(198½ Lines)

1.981968MHz
157×12624Hz
(266⅔ Lines)

2.802528MHz
222×12624Hz
(377 Lines)

3.963936MHz
314×12624Hz
(533⅓ Lines)

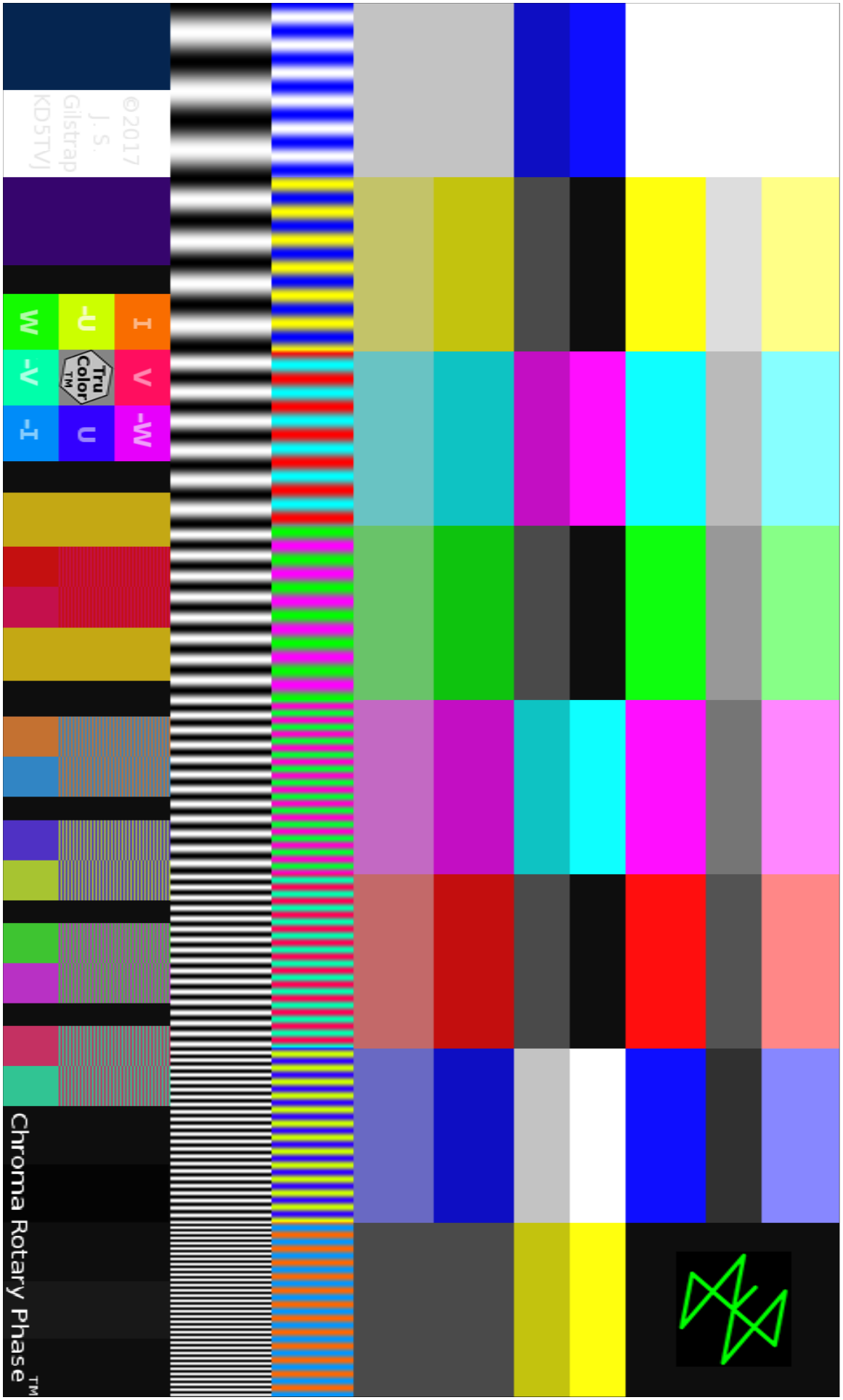

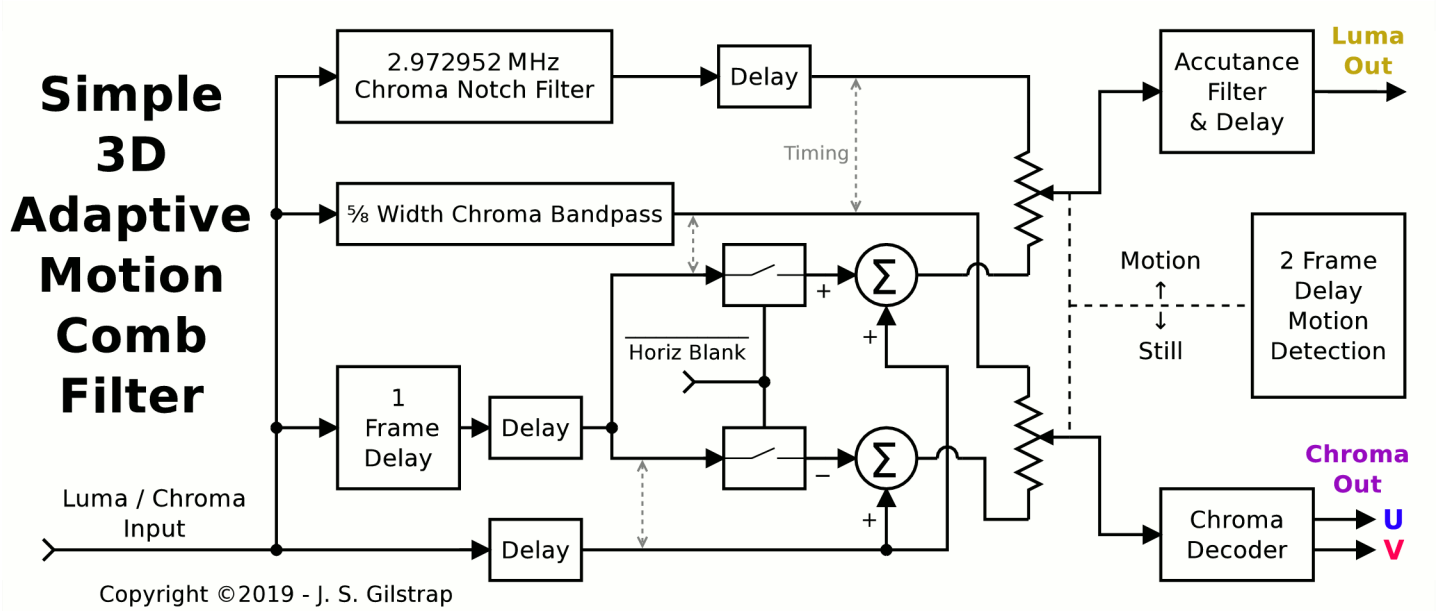

3D Adaptive Motion Comb Filter should use a variable noise floor to control the threshold level and prevent the switch from still to motion being triggered by signal noise. Once above the threshold level the transitional fader wipe should occur over 5–7 pixels to eliminate any hard edges between the still and motion areas. An alternative to an adaptive motion filter is to use the field comb always and pre-process the signal before transmission in much the same way the VHS HQ circuitry does for the 4 line noise reduction so when the 4 lines are added on playback the original 4 lines are produced. In this case the combed motion artifacts are negatively added so upon reception the field comb will cancel them out while also providing high resolution full Luma/Chroma separation in motion areas. See **NTSCspecifications** for more advanced encode/decode.

Vertical sync pulse will be similar to an NTSC 2:1 interlace that has a hammer head in the middle of the screen and 2× the number of equalization or VSync pulses per horizontal period. For a 3:1 interlace the number of equalization or VSync pulses per period will be 3× and produce two hammer heads offset from the center to each side on the screen.

To the right is the vector scope representation of **C**hroma **R**otary **P**hase as it rotates through the 4 phases. Unlike PAL in which the pattern mirrors across the **U** axis, in CRP it mirrors across the **I** & **Q** axes. During detection by shifting the PLL Chroma BFO Phase by 90° per horizontal line converts the vector scope image to a PAL scope image, shown in **RED**, that has been **V** switched with the colorburst vector sitting at 135°.

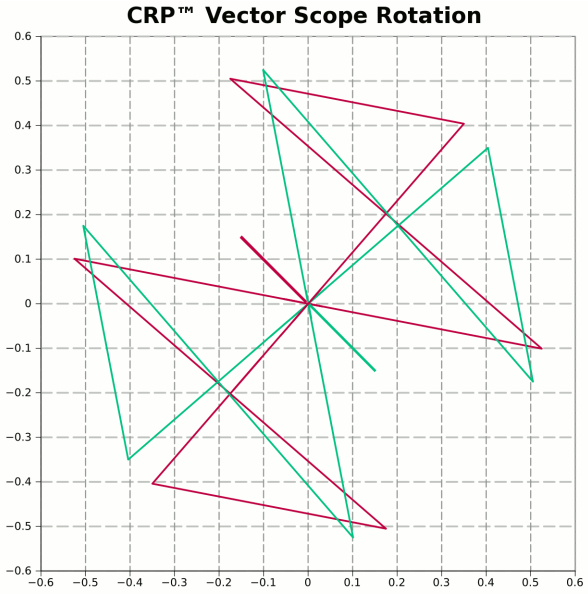

Copyright ©2019 - J. S. Gilstrap (KD5TVJ) - All Rights Reserved.

Most Color Gamuts

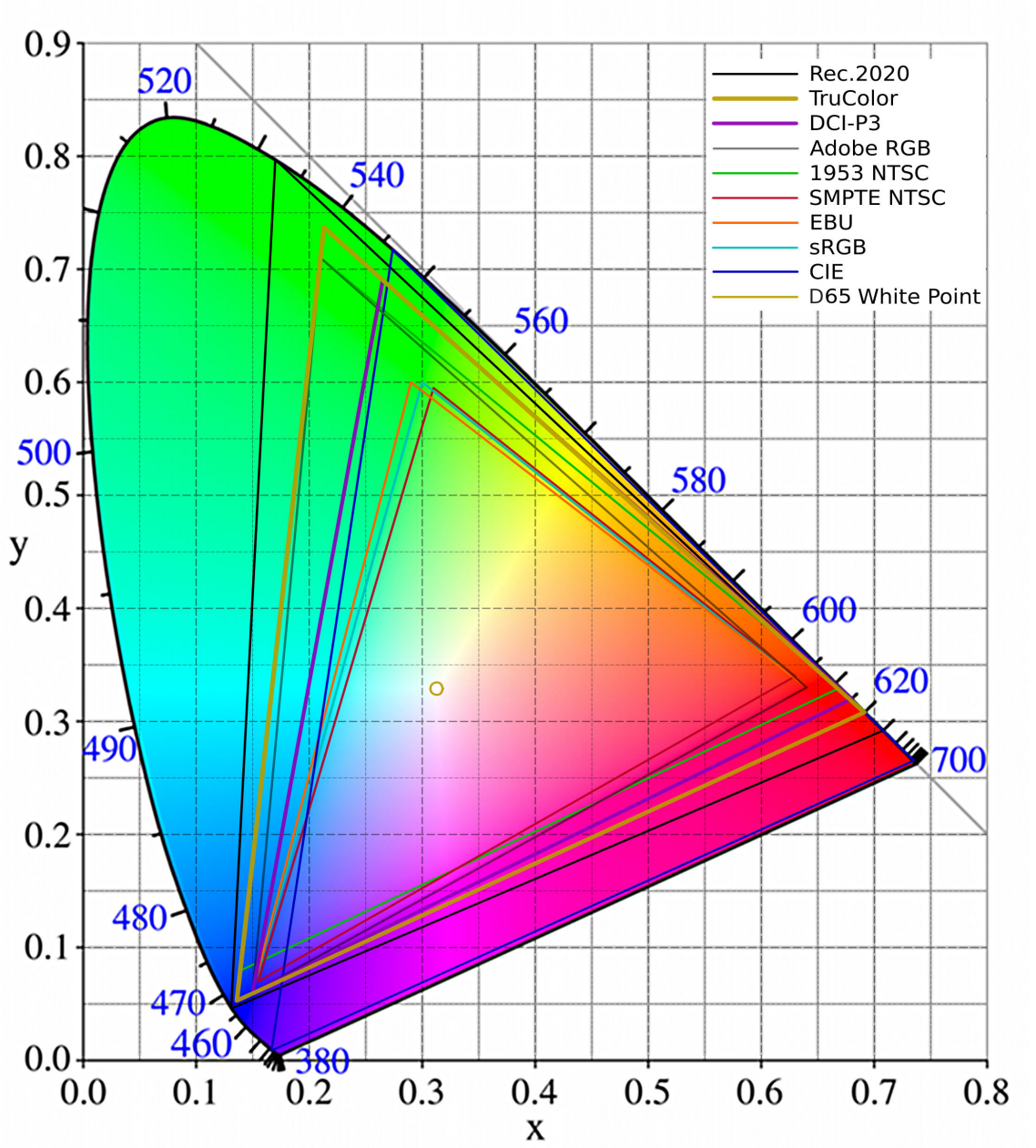

Smaller than **Rec.2020** the **TruColor** gamut encompasses both **DCI-P3** and **1953 NTSC** as well as **Adobe RGB**, **SMPTE NTSC**, **EBU**, and **sRGB** providing increased saturation for all colors corresponding to wavelengths of **620** (0.691, 0.308), **540** (0.213, 0.737), and **467** (0.136, 0.053).

RED

Same: Adobe RGB, sRGB, EBU ; 0.64, 0.33

GREEN

Same: Adobe RGB, 1953 NTSC ; 0.21, 0.71
Close Group: SMPTE-NTSC, sRGB, EBU

BLUE

Same: Adobe RGB, sRGB, DCI-P3, EBU ; 0.15, 0.06

Expanded 5 Color Gamut

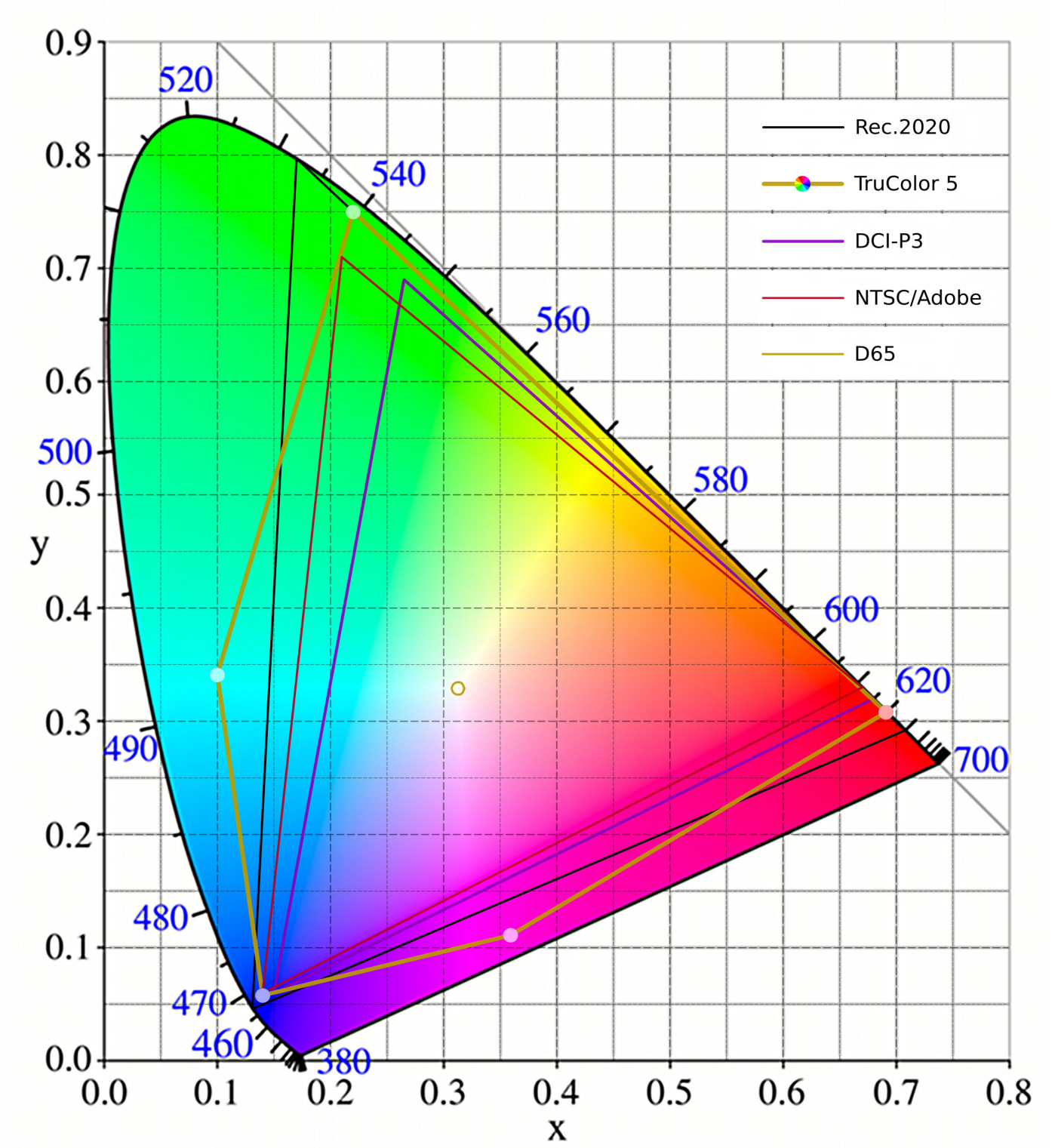

Given that both **Red** and **Green** channels can handle negative values, −0.5 and −0.25 respectively, within the composite signal this allows the transmission of increased saturation levels for both **Cyan** and **Magenta** to support **xvYCC** encoding. The primaries and secondaries are: **Red** 620nm (0.691, 0.308), **Green** 539nm (0.220, 0.750), **Cyan** 492nm (0.100, 0.341) and **Blue** 467nm (0.140, 0.058), **Magenta** (0.359, 0.111).

Copyright ©MMXXII J. S. Gilstrap – All Rights Reserved.

The **Narrow Band Sound** sub-carriers which can contain up to 12dB of amplitude modulation can be compressed down to 6dB, possibly following the peak amplitude prior to the squaring of the signal. A full 12dB of compression could be employed but signal quality might be notice-ability affected or a 9dB reduction could be a good choice. The over easy compression should have an attack of ~1ms and a decay of ~60ms with the proper amount of compression already achieved prior to the signal modulation, i.e. the compression action should happen ~1ms sooner than the signal modulation. The actual compression modulation should not widen the signal bandwidth any since the attack and decay filtering will only contain low frequency modulation information. This compression will not affect the phase deviation but only lower the S/N ratio by a maximum of 6dB. This will allow twice the headroom and stronger un-modulated carrier levels for all three sound signals on the main Q channel. For detection an alternative to hard limiting and Tan(θ/2) wave shaping a similar process used in a C-QUAM® decoder can be employed. The Env and I signals are identical but phase inverted to each other. If the signal doesn't contain any amplitude noise the sum of the two will contain no information, only a DC level. The decoding process will un-modulate any amplitude noise by using the ΔG modulator controlled by the sum of the Env and I signals being compared to a DC reference through a feedback path. This effectively functions as a limiter while also outputting Tan(θ/2) eliminating the need for wave shaping and will also remove any amplitude compression applied.

In Lieu of narrow band sound a COFDM sub-carrier could be used for Digital Audio using MP3, Vorbis, Opus or another open source CODEC for 5.1 Surround Sound.

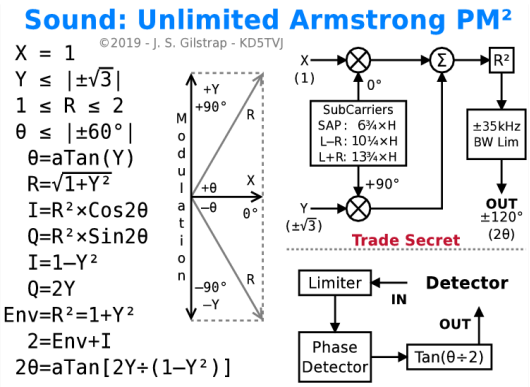

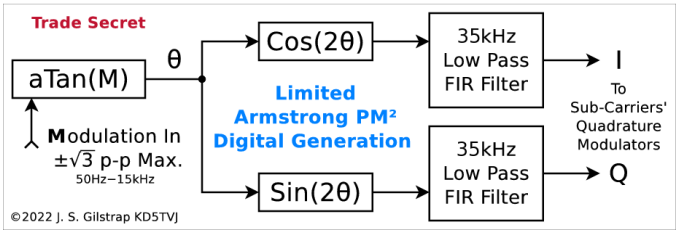

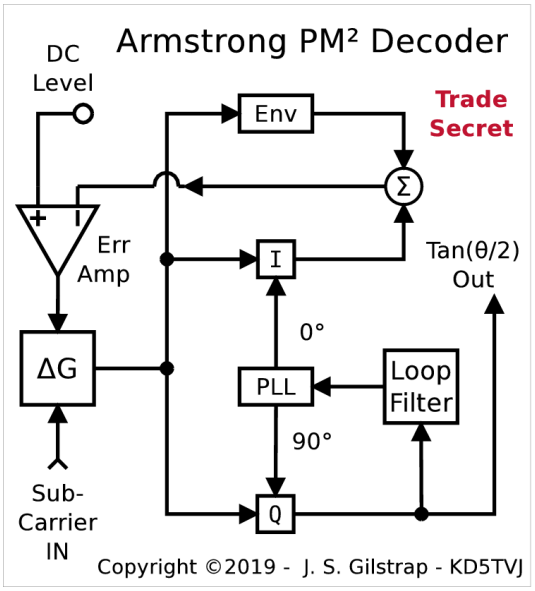

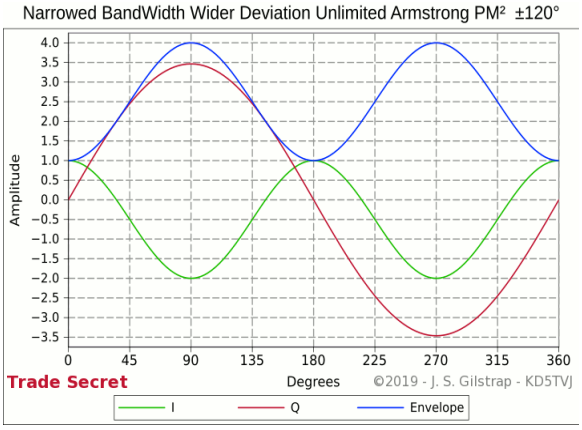

Chroma Rotary Phase™ 8× Sampling

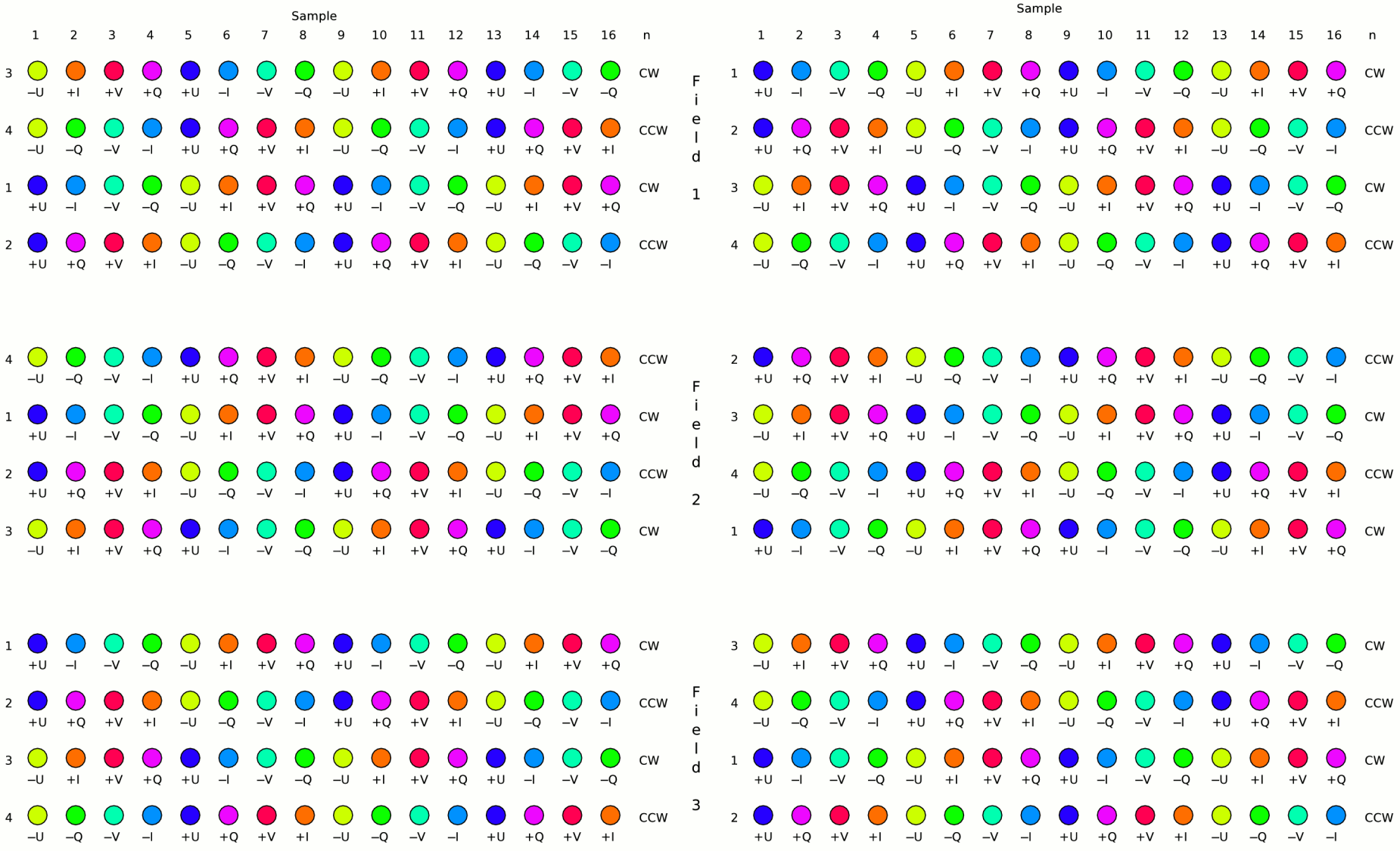

Copyright ©Mar2018 J. S. Gilstrap - KD5TVJ All Rights Reserved.

TruColor™ Chroma Decoder

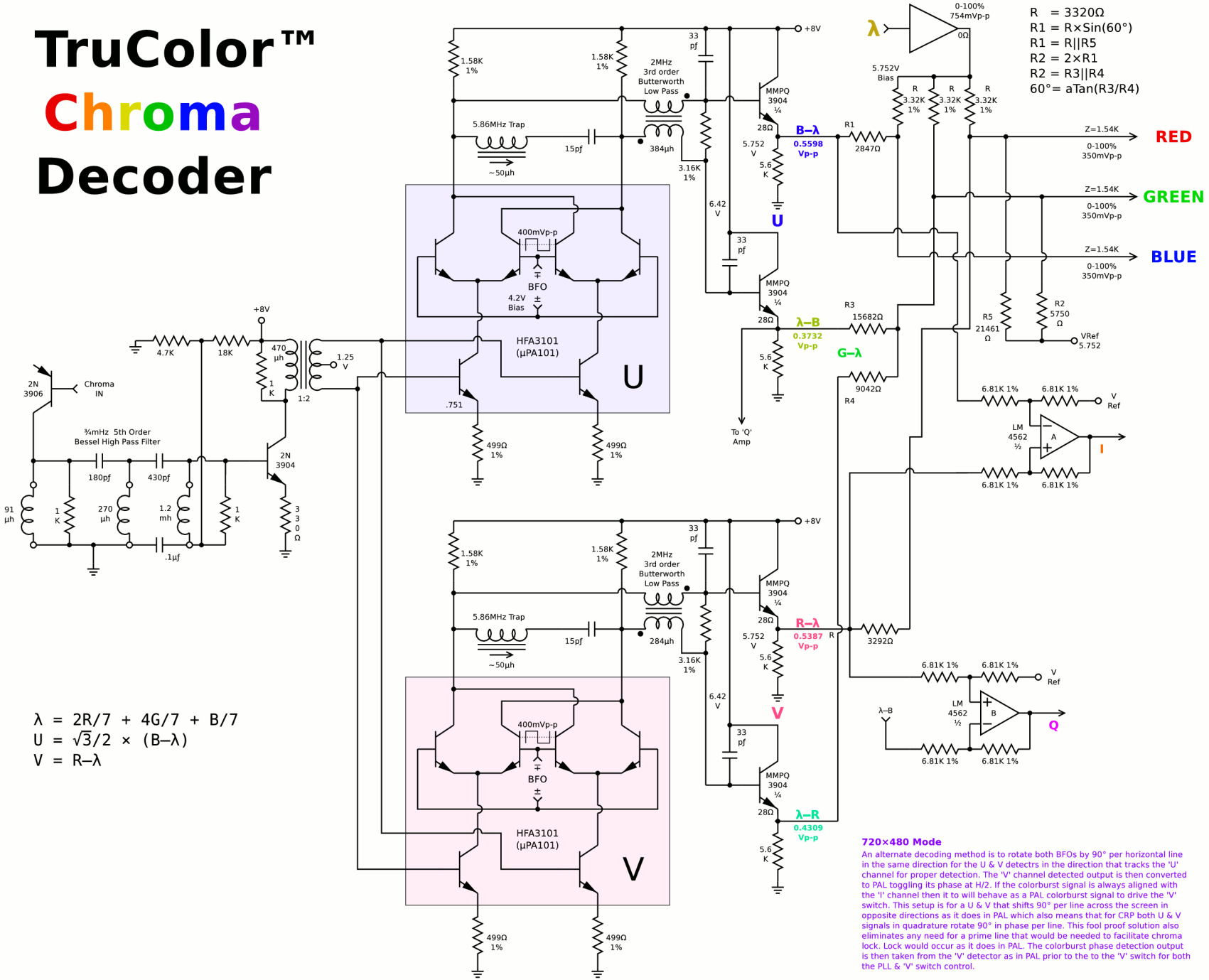

$\lambda = 2R/7 + 4G/7 + B/7$
$U = \sqrt{3}/2 \times (B-\lambda)$
$V = R-\lambda$

720×480 Mode

An alternate decoding method is to rotate both BFOs by 90° per horizontal line in the same direction for the U & V detectrs in the direction that tracks the 'U' channel for proper detection. The 'V' channel detected output is then converted to PAL toggling its phase at H/2. If the colorburst signal is always aligned with the 'I' channel then it to will behave as a PAL colorburst signal to drive the 'V' switch. This setup is for a U & V that shifts 90° per line across the screen in opposite directions as it does in PAL which also means that for CRP both U & V signals in quadrature rotate 90° in phase per line. This fool proof solution also eliminates any need for a prime line that would be needed to facilitate chroma lock. Lock would occur as it does in PAL. The colorburst phase detection output is then taken from the 'V' detector as in PAL prior to the to the 'V' switch for both the PLL & 'V' switch control.

Copyright ©2020 – J. S. Gilstrap – All Rights Reserved.

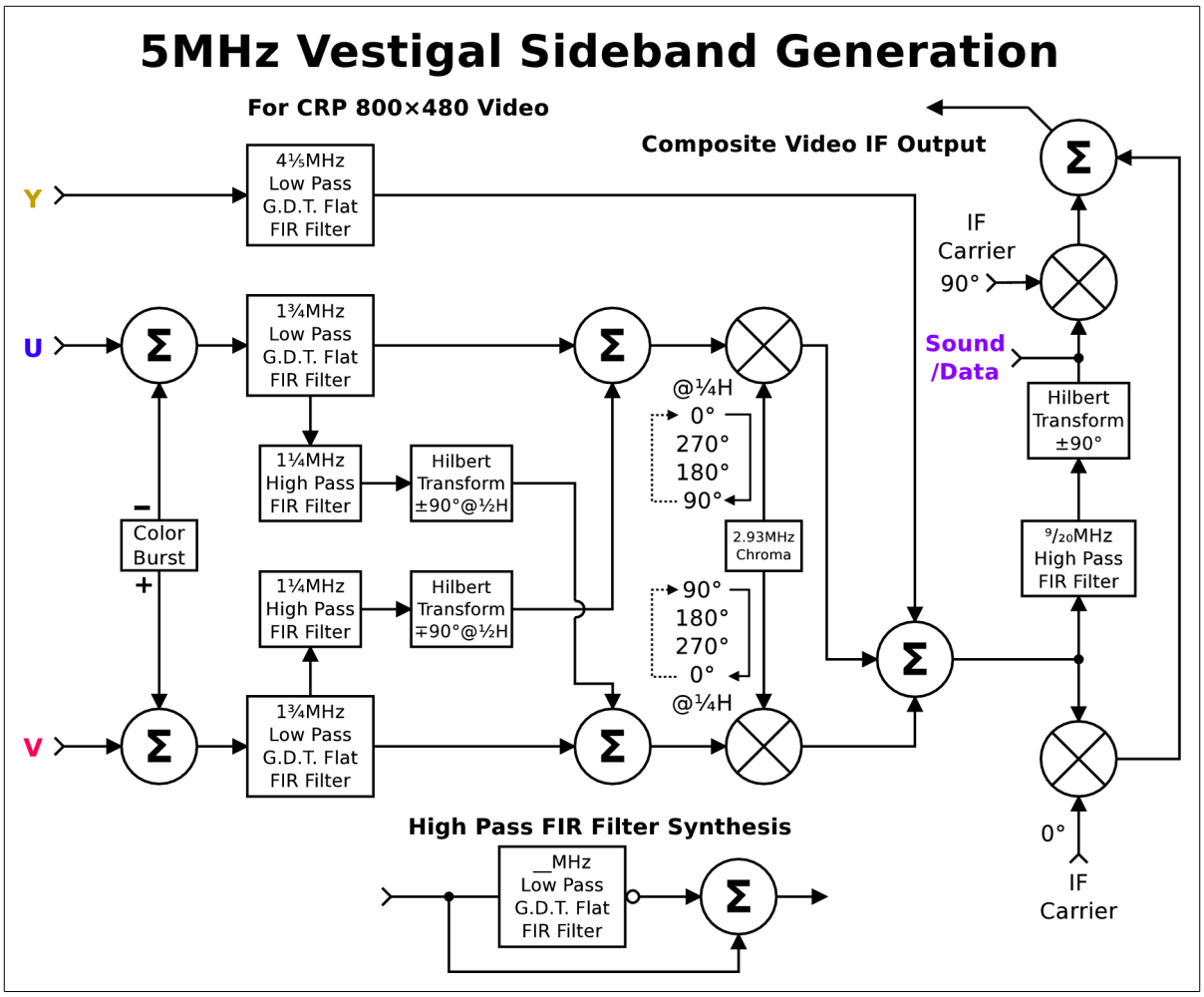

Alternative ±45° VSB Offset

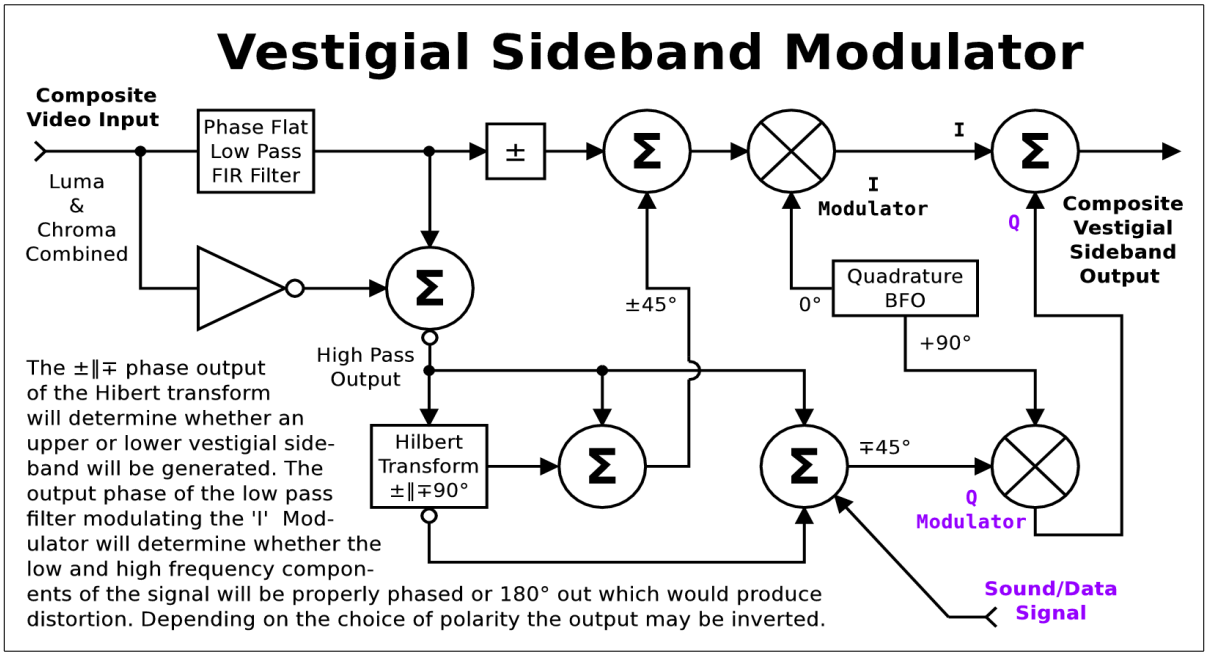

Advanced reading:

1. NTSC and Beyond – Yves Faroudja – IEEE Transactions on Consumer Electronics, Vol.34#1 2/88
2. The Engineer's Guide to Decoding & Encoding – John Watkinson – Snell & Wilcox Handbook Series
3. A Handbook for the Digital Engineer – Keith Jack – Newnes Elsevier
4. Improved Television Systems: NTSC & Beyond – William F. Schreiber
5. Design of FIR Filters – Elena Punskaya